CMT by EUROMAGROUP

WORKHOLDING
DEVICE

Design and graphics by
EUROMA GROUP S.r.l.

WE ARE WITH

This catalogue has been issued for those wanting to build their own multi-purpose fixtures or special purpose machines for metal cutting.
You can select from the whole range of standard components to completely customize your machine.

AUSTRALIA
Mitcham

AUSTRIA
Vienna

BRAZIL
San Paulo

BULGARIA
Sofia

CANADA
Toronto

CHINA
Guangzhou, Nanjin

CROATIA
Rijeka

DENMARK
Middel Fart

FINLAND
Naantali

FRANCE
Paris

GERMAN
Dortmund, Munich

GREAT BRITAIN
Birmingham

YOU WORLDWIDE

GREECE
Athens

HUNGARY
Budapest

INDIA
Bangalore, Delhi

IRAN
Teheran

KOREA
Seoul

MEXICO
Mexico City

POLAND
Wrocław

PORTUGAL
Porto

SINGAPORE
Singapore

SOUTHAFRICA
Pretoria

SPAIN
Barcellona, Pamplona

SWEDEN
Stoccolma

SWISS
Arbon

TURKEY
Istanbul

U.S.A.
Milwaukee

IN THIS CATALOG

Page 6

Special applications

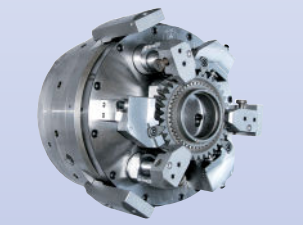

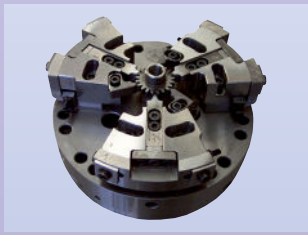

A3 Page 18
A2/4 Page 20

"Soft clamping" automatic chuck with bar passage

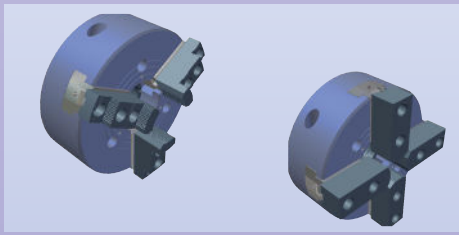

GT2 Page 22
GT3 Page 23

"Heavy duty" automatic chucks

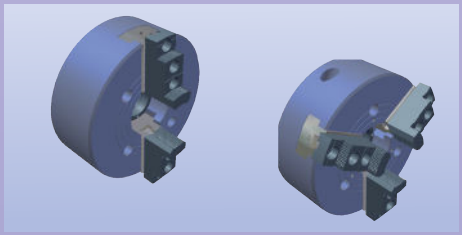

Diagraphm Page 24
O Series Page 25
Carrier - 3 jaws Page 26

Diaphragm chucks and Carrier

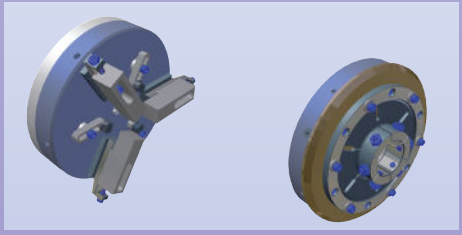

PR Page 27

Built-in hydraulic/pneumatic chucks

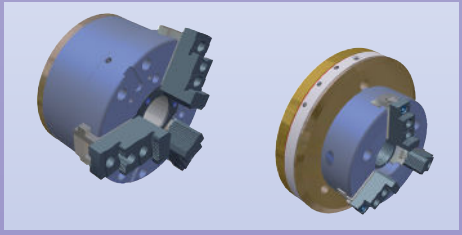

YOU CAN FIND

DX Page 28

Static platforms

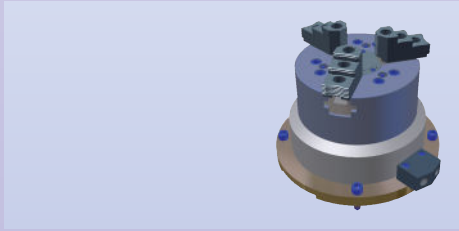

Pneumatic cylinders without bar passage B Page 30
Accessories - valves BX Page 31
Pneumatic cylinders with bar passage BHS Page 32

Pneumatic cylinders

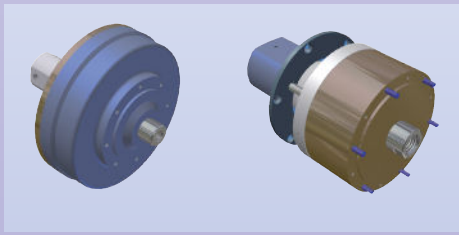

Hydraulic cylinders with coolant passage RI Page 33
Hydraulic cylinders with bar passage XT Page 34

Hydraulic cylinders

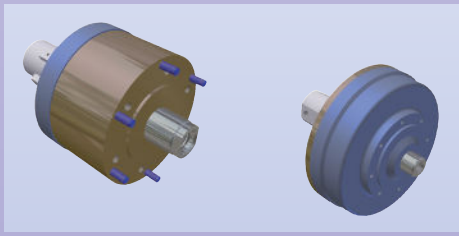

Rotating collet chucks CL Page 36
Rotating collet chucks CL.A Page 37

Collet chuck, static and rotating

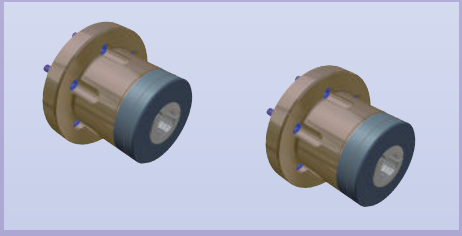

Jaws A K series Page 38
Jaws GB KZ GH GX series Page 39
Diaphragm jaws Page 40
ASA flanges GB KZ Page 41
Valves and controls Page 42

Accessories

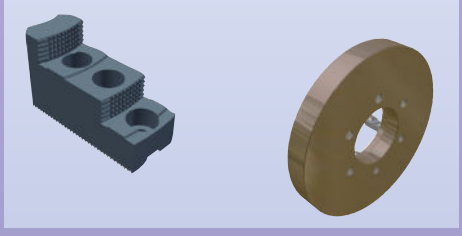

Diagrams Page 43

Assembly diagrams

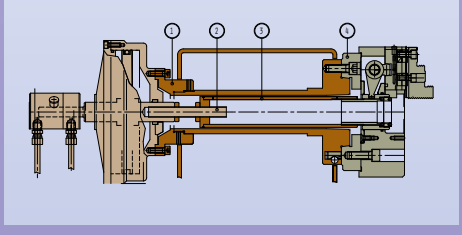

MCR-ST
Automatic quick change carrier with locators and recovering rotating arms

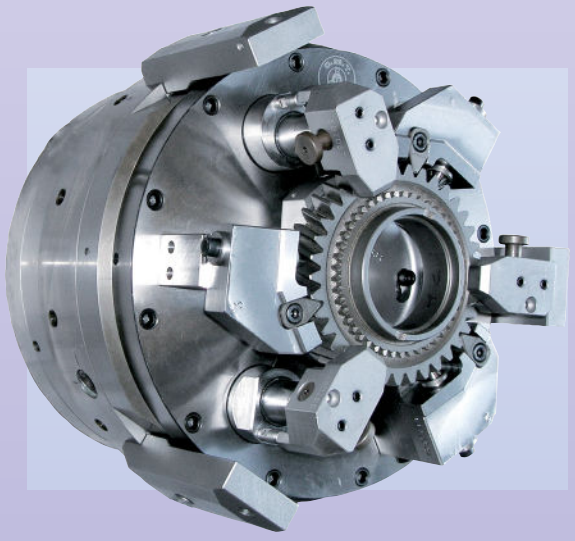

- High rigidity during machining
- Repeatability accuracy within 0.01 mm
- Quick change without any further adjustment
- High centering accuracy on primitive gear diameter
- High roundness accuracy in hole execution
- High rotation speed
- High cutting on hard turning
- Suitable to machine outer taper by means of recovering arms
- Manual or automatic loading
- Gear presence check (PEL)
- Balanced system
- Suitable to work with external dressing wheel holders (for grinding)

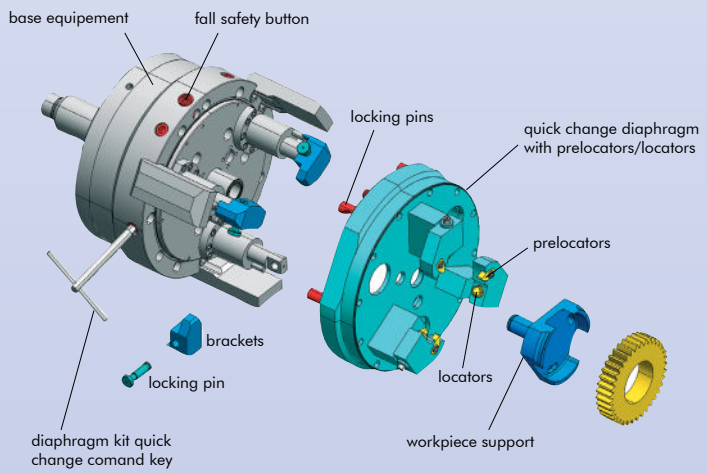

Radial and front clamping

The gear is loaded manually or automatically presetted through the prelocators than clamped by the locators.
After the arms close down with rotating and axial movement clamping in very rigid way the gear to allow hard machining.
Mechanism driving the arms is swivelling to have a correct stirrup effect.
Carrier mechanism and stirrup one are driven separately therefore needing a double clylinder.
The machine is able to machine with such a sequence the gear hole. When machining the taper gear the carrier is still clamping the workpiece.

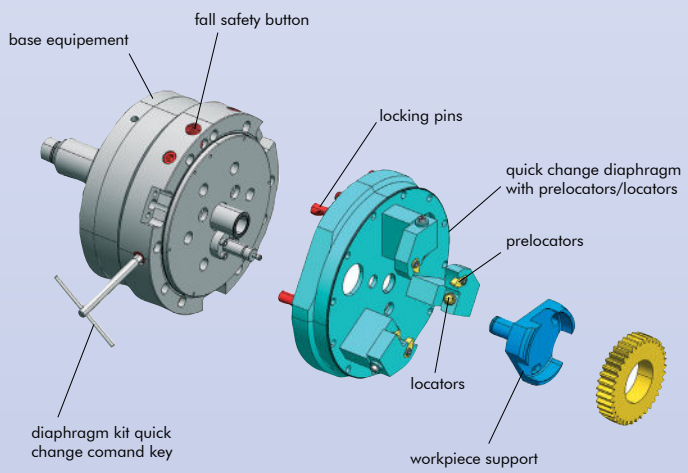

Radial clamping

The gear is loaded on the carrier, presetted through the prelocators than clamped by means of locators. The mechanism is driven by one only rotary cylinder.
With such a sequence the machine can machine the gear hole and taper.

M-MOD
Automatic carrier for gear hole grinding; modular system for small production lots

- Absolute modularity by means of angular adjustment of the bases holding locators and prelocators in short time
- Very high repeatability accuracy (within 0.005mm)
- Loading both manual or automatic
- Predisposition for workpiece presence check
- Predisposition for coolant passage
- High accuracy granting a repeatability lower than 0.005mm. The use of presetted angular calibres allows the clamping of a wide range of gears with different teeth No. This always granting a presetting accuracy lower than 0.01mm
- Quick change: long adjustment times of gear to find machine centering are eliminated by using angular calibres which bring the system automatically in position
- Modularity: you can get the desired modularity for clamping different gears with different OD and teeth No just moving the angular bases and replacing locators E and prelocators D locator spacers G and angular calibres C

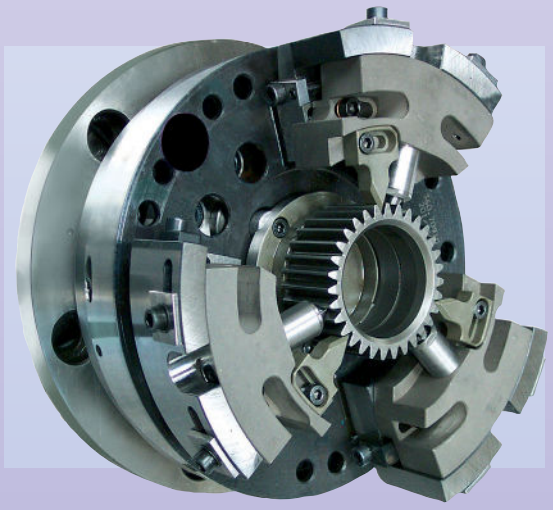

Outside diameter 215 = Capacity up to 100

Outside diameter 270 = Capacity up to 150

Outside diameter 330 = Capacity up to 200

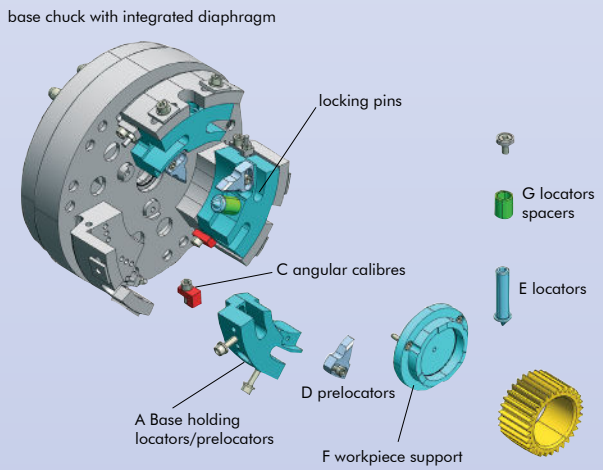

How it works

When the system is open (loading) the robot or the operator put the gear to be oriented by the prelocators.
After the gear is supported against its stop.
Driving back the mid shaft by means of the rear rotary cylinder, for the elastic return effect of the carrier body you get the gear clamping through the locators.

M-MOD -X
Similar to M-MOD system but suitable for small dimensions gear

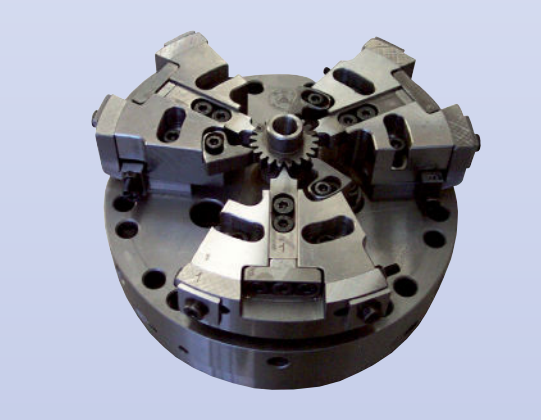

Automatic device for small size taps (M3-M30) driving on a grinding machine on centers

- Driving by means of clamping without influencing the positioning got by centers
- Quick set-up
- Feeding both pneumatic and hydraulic
- Loading both manual and automatic
- Specific sizing to allow passage of grinding wheels for multidirectional machining
- Centrifugal force balancing
- Protection against dirt

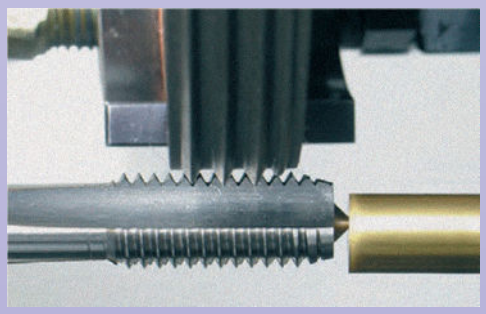

In the picture above: Device with 120 mm diameter with jaws sizing to allow grinding wheels passage. System realized to clamp a tap range from M3 up to M30, suitable for bigger size taps too.

Device is provided with built-in cylinder for automatic movement of the jaws, feeded by rear distributor.

Special centering and stirrupping clamping system for CNC turning-milling-grinding machines suitable for automatic loading

Centering clamping on hole and stirrup
PEL workpiece detection system
Long stroke expander. 7 mm on diameter
Repeatability accuracy lower than 0.005 mm
Quick change centering
Quick change stirrups
System driven by double cylinder
High rotation speed

Chuck description

The system is complete with 2 independent mechanisms.
First one is moving the central expander having stroke mm7 on diameter, centering the workpiece from the inside.
Second one is linked to a moving plate driving 3 rotating and stirrupping shafts. These are clamping the workpiece granting stiffness during machining.
Both systems are driven by a double cylinder.
There is a PEL detection system checking the right positioning of the workpiece by the robot.
The change of workpiece type is very fast thanks to quick coupling systems of different components.

Self-centering device for transfer machines

2 jaws self-centering device with accuracy <0,005
Hydraulic built-in cylinder
High rotation speed
Low impact of centrifugal force on the system
Internal passages for air pressurizing

Device with axial and rotating independent arms

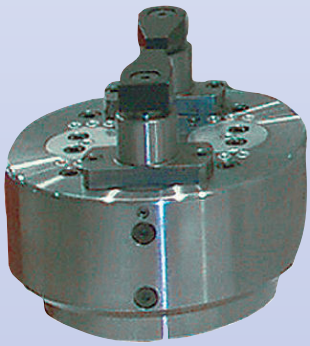

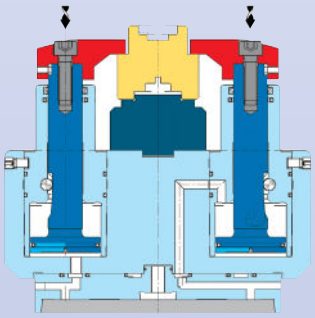

Two long stroke jaws compact self-centering device

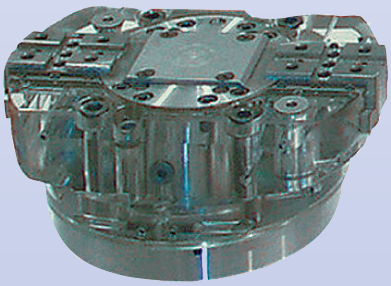

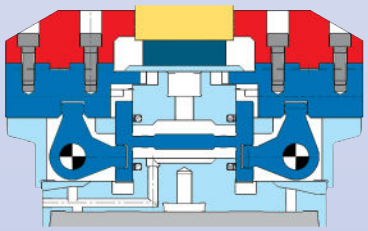

Water proof long stroke compact self-centering device

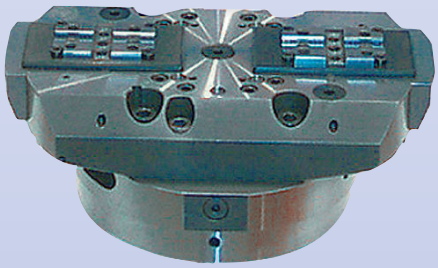

Compact device with 1 fix and 1 moving jaw, palletized with jaw quick change

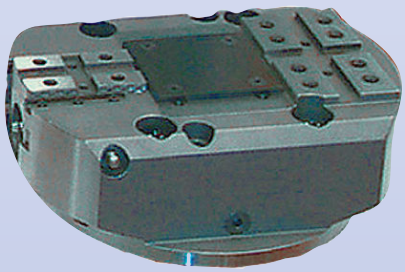

Automatic chuck for alloy wheels clamping

Automatic device for motor bike wheels with
fixed supports and orientation stop chucks
No-distortion axial/rotating clamping
Mechanic antivibrating spring system

Self-centering and stirrupping chuck for high rotating turning

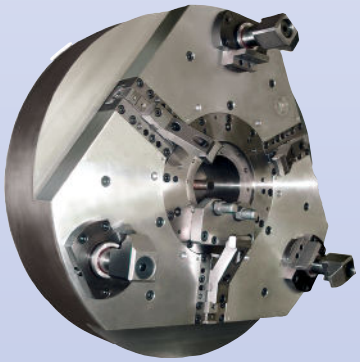

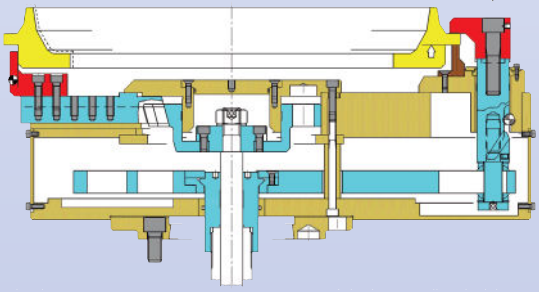

No-distortion chuck for carbon fiber bike wheels clamping

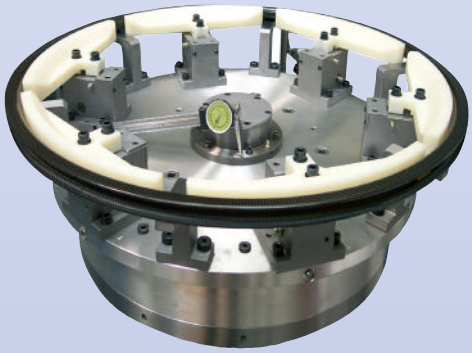

Motor bike 3-spoke wheel chuck

No-distortion automatic radial clamping chuck

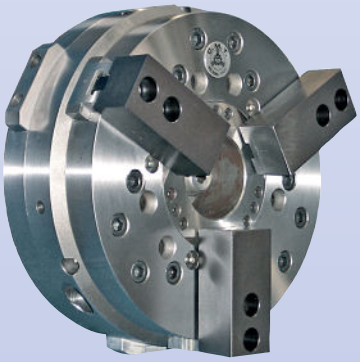

Centering and stirrupping chuck for turning

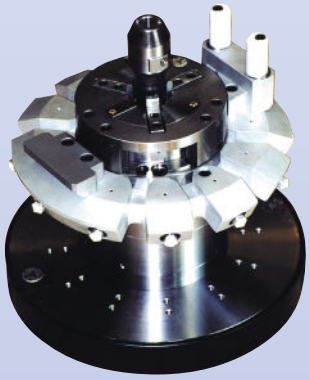

Elastic collet chuck

Radial clamping device with collet
Quick change collet and support, bayonet system
Axial movement controlled by built-in cylinder
Unlocked by cylinder and locked by spring (or double effect)
Pressurized system
Stroke control predisposition

Eccentric collet chuck

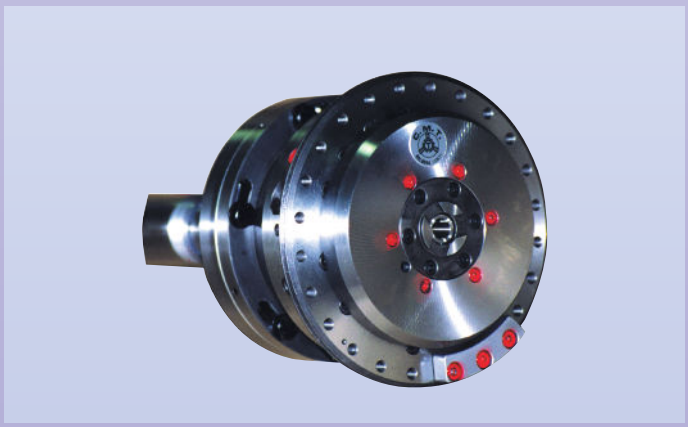

Collet –carrying base for ID collets

Collet – carrying base quick clamp with PEL (gear presence check)

Modular system for ID/OD collets

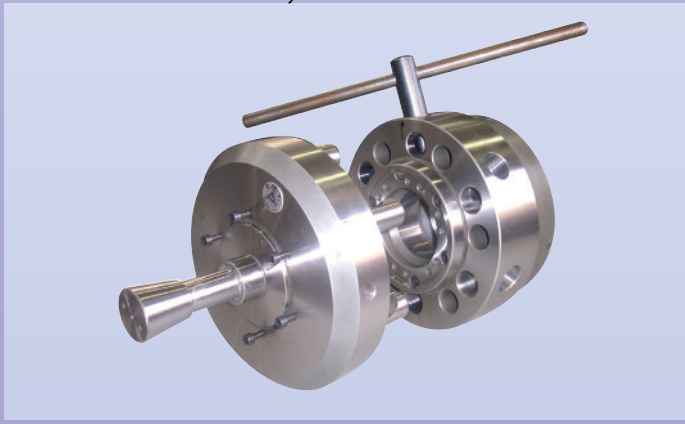

Diam. 365 device with sectors collet

Elastic collet

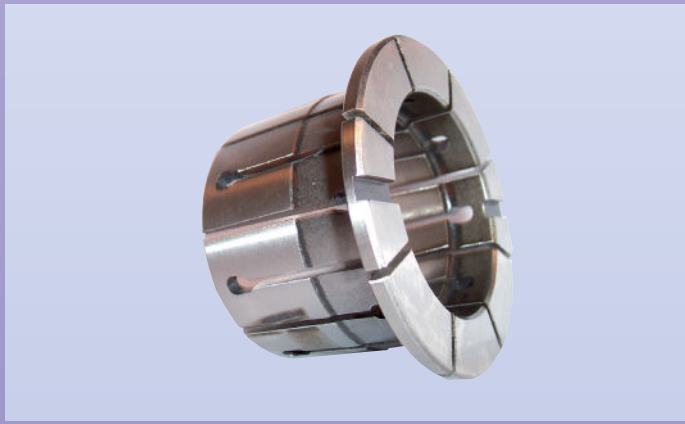

Bracket chuck for pinion clamping on balls

Workpiece to clamp: bevel pinion

Diaphragm device locator clamping on pitch diameter and automatic locator loading

Workpiece to clamp: gears

Diaphragm device clamping on pitch diameter with pins

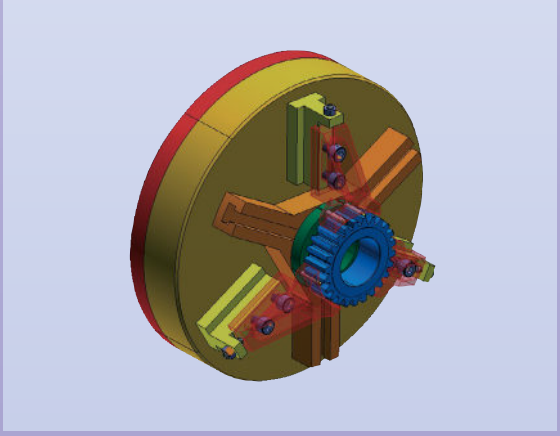

Workpiece to clamp: gears

Self centering chuck for gears clamping on pitch diameter by interchangeable pins on jaws

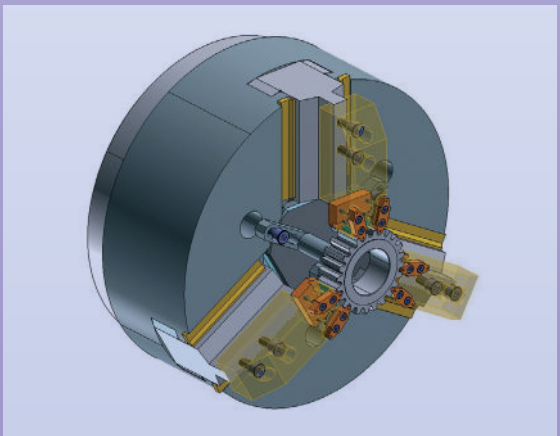

Workpiece to clamp: gears

Double diaphragm device 3+3 overlapped clamping jaws

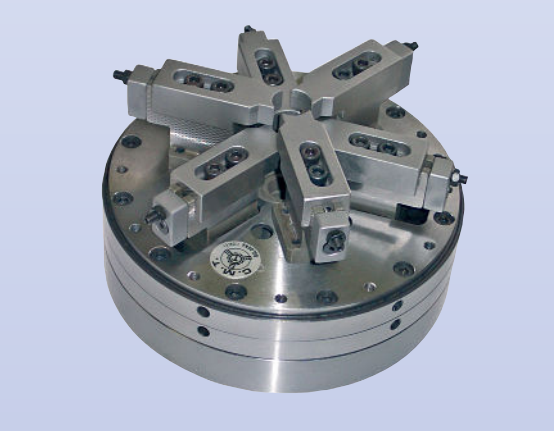

Workpiece to clamp: shaft with 2 different diameters in length

Double diaphragm device for long gears, clamping on pitch diameter and loading on locators both on two axial levels

Workpiece to clamp: long and heavy gears

Oscillating 3 jaws chuck for pistons clamping

Workpiece to clamp: cars and trucks pistons

Forged hubs system with radial clamping and indications for timing, supports and orientations

Workpiece to clamp: anomalous shaped workpieces

Diam. 650 chuck with built-in hydraulic cylinder on vertical pallet system
Pressure storage to maintain a constant clamping

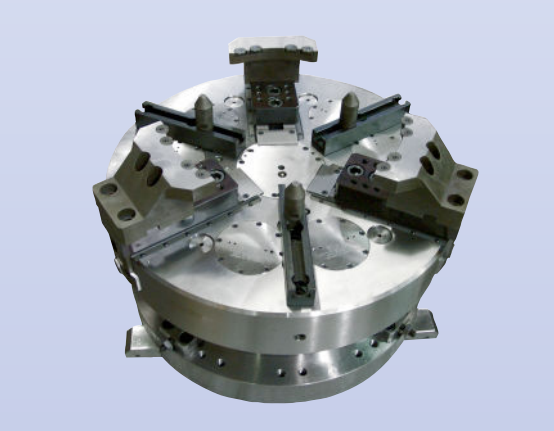

Workpiece to clamp: semi-processed forged pieces

Hydraulic device with built-in cylinder, clamping ISO 40/50 tapers

Workpiece to clamp: ISO tapers

Hydraulic static platform with shaped jaws

Workpiece to clamp: ground rings

2+1 long stroke jaws chuck
Used on vertical turn for tracked forks clamping

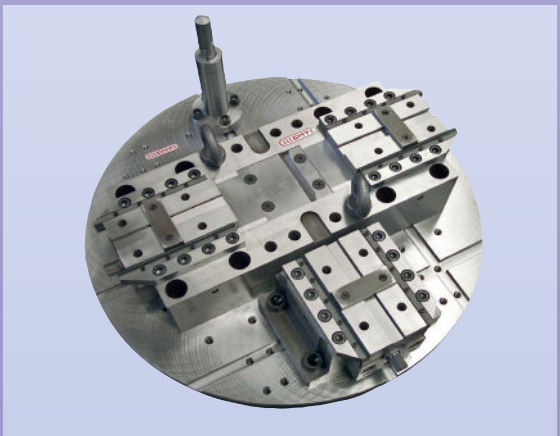

Workpiece to clamp: tracked forks

- **Bearing seat machining chuck**
  High precision automatic device

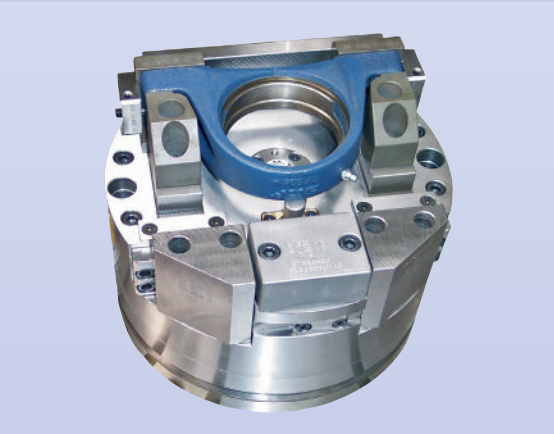

Workpiece to clamp: pieces with bearing seat

- **Pipe clamping self-centering chuck with independent clamping sectors installed on pallet system**
  Hydraulic built-in cylinder and jaws with clamping sectors, independent hydraulic movement

Workpiece to clamp: distorted pipes

- **630 mm chuck with extra stroke = 80 mm on diameter, built-in hydraulic cylinder**

- **2 jaws chuck for transfer**
  High rotation speed at 8000 rpm keeping clamping force

- **2 independent pistons hydraulic cylinder both with stroke control**

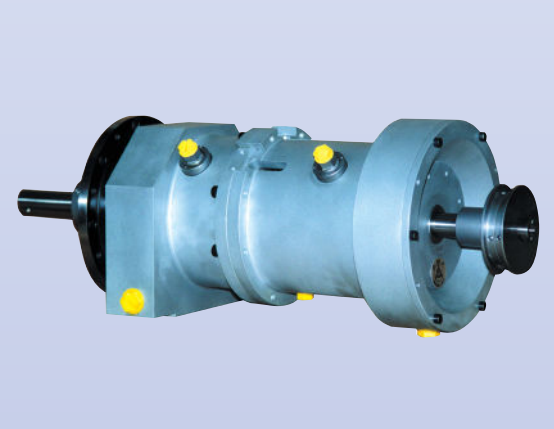

- **2 independent pistons hydraulic cylinder both with stroke control, 4 ways distributor, built-in safety valves**

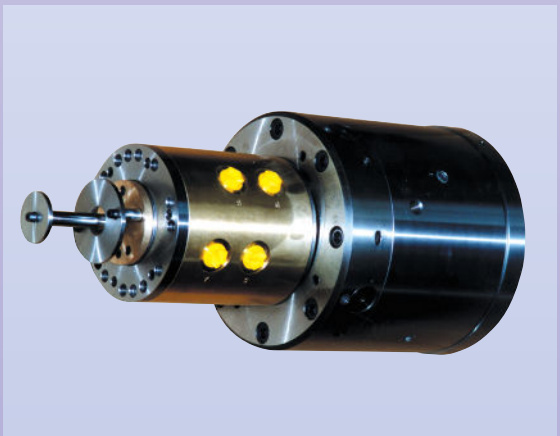

- **Diam. 1000 high precision chuck for drilling and balancing train wheels**

Workpiece to clamp: train wheels

- **Automatic chuck with built-in hydraulic device for shaft, timing radial and eccentric clamping**

Workpiece to clamp: cam shafts

- **Diam. 420 device, no-distortion clamping, Sequential centering and stirrupping movement, controlled by one piston cylinder**

Workpiece to clamp: crown gears

- **2 independent jaws hydraulic device for printing machines rollers clamping**

Workpiece to clamp: shafts and rollers

- **Diam 630 6 jaws self-centering chuck with built-in hydraulic cylinder and automatic clamp system on pallet**

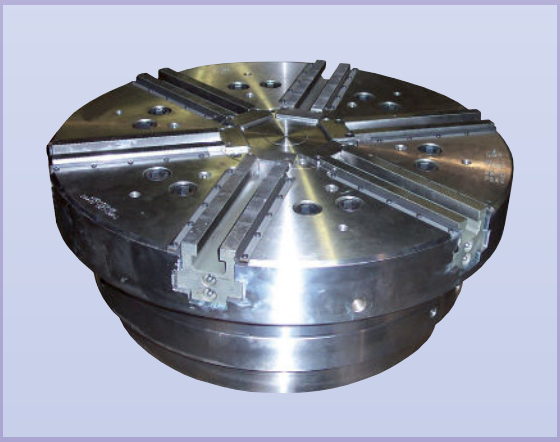

- **Diam. 750 3 jaws self-centering chuck with 400 diameter extra-large bar passage**

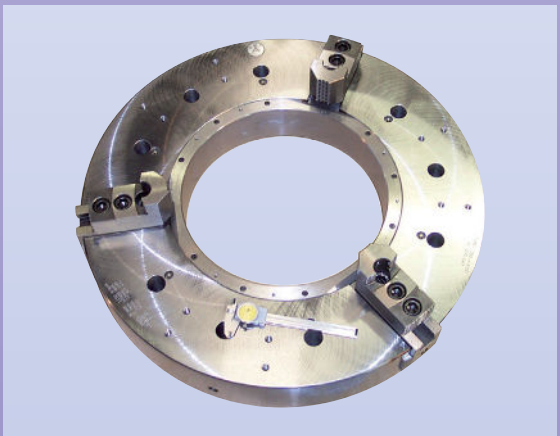

A - 3 base jaws
Lever system

- Motion system by levers to assure a greater sliding of the sliders, high precision and safe gripping
- Self-centering chuck specific for **grinding** works
- Bar passage
- Special high wearing resisting jaw-bases
- **Pitch 2.5x60°**
- Sliders are finished in adjustment with the base to achieve high precision

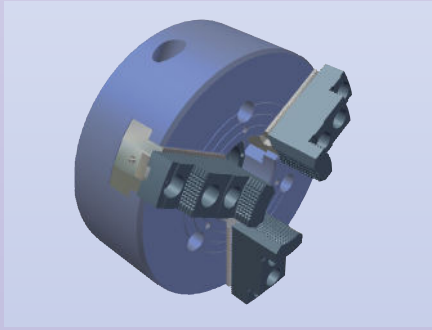

		AL3	AA3	AE3	AN3	AB3	AC3	AD3	AG3	AI3	AF3	AO3	AH3	AR3
Lever ratio	–	1,6	2	2,4	–	2,2	2,2	2,2	2,2	2,2	2,5	2,5	2,5	2,2
Gripping force ratio	–	1,1	1,3	1,56	–	1,43	1,43	1,43	1,43	1,43	1,62	1,62	1,62	1,46
Tooth pitch	mm	2,5x60°	2,5x60°	2,5x60°	–	2,5x60°	2,5x60°	2,5x60°	2,5x60°	2,5x60°	2,5x60°	2,5x60°	2,5x60°	2,5x60°
Speed	rpm	4000	4000	3500	–	3200	2800	2600	2400	2200	2000	1700	1500	1200
Weight	kg	2,5	3,9	5,2	–	10	14	22	21,4	28,2	47,6	56	89	120
Hardened jaws	Ref.	–	1654	1365	–	1270	1334	154	154	154	239	239	488	1614
Soft jaws	Ref.	1314	636	1364	–	1271	1335	155	525	525	240	240	489	1613
T-nut	Ref.	–	635	1298	–	1298	1298	156	156	156	241	241	490	1612
Max draw bar pull	N	12700	15410	13300	–	21500	21500	35000	35000	35000	48000	48000	80000	100000
Max clamping force	N	14000	20000	25000	–	43000	43000	69000	69000	69000	110000	110000	180000	190000

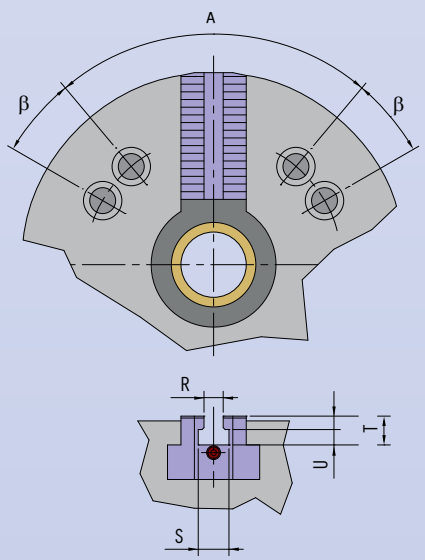

MOUNTING
FOR LATHE

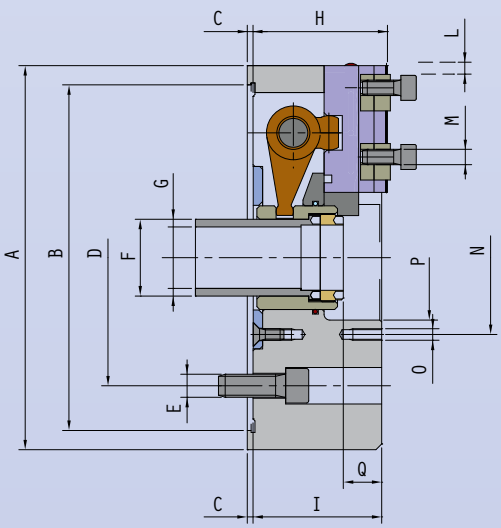

MOUNTING FOR
GRINDING

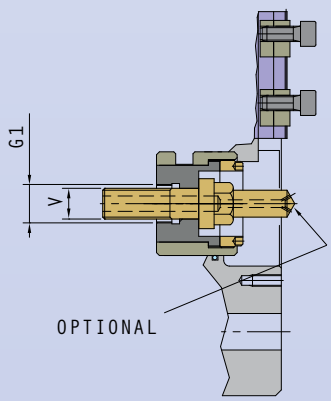

"Soft clamping" automatic chuck with bar passage

			AL3	AA3	AE3	AN3	AB3	AC3	AD3	AG3	AI3	AF3	AO3	AH3	AR3
A	Chuck size diameter	mm	90	120	140	150	170	200	230	250	270	300	330	400	500
B	H7	mm	80	110	130	–	160	180	210	230	250	280	310	380	470
C	–	mm	3	3	3	–	3	3	4	4	4	5	5	5	5
D	–	mm	60	82,6	82,6	–	104,78	133,4	133,4	171,4	171,4	171,4	235	235	330,2
E	–	mm	M8	M10	M10	–	M10	M12	M12	M16	M16	M16	M20	M20	M24
F	–	mm	M12	M10	20	–	35	40	54	74	94	80	110	110	162
G	Chuck bore	mm	–	–	15	–	30	34	46	66	86	74	104	100	150
G1	–	mm	–	–	M20x1,5	–	M20x1,5	M20x1,5	M20x1,5	16	16	16	–	16	–
H	Tooth height	mm	47	55	59	–	70	70	84	84	84	105	105	126	142
I	Chuck width	mm	45	53	57	–	67	67	81	81	81	102	102	123	138
L	Jaw stroke	mm	3	3	4	–	4	4	5	5	5	6	6	7	8
M	–	mm	M6	M6	M8	–	M8	M8	M10	M10	M10	M12	M12	M16	M20
N	–	mm	–	55	–	–	64	80	100	115	130	126	172	180	–
O	–	mm	–	M5	–	–	M5	M6	M8	M6	M6	M8	M8	M10	–
P	–	mm	32	38	39	–	55	65	80	100	115	110	140	150	–
Q	–	mm	19	22	19	–	20	23	27	28	27	37	37	43	46
R	H8	mm	–	8	10	–	10	10	12	12	12	18	18	20	30
S	–	mm	–	12,5	16	–	16	16	19	19	19	25	25	32	40
T	–	mm	–	13	15	–	15	15	18	18	18	26	26	32	32
U	–	mm	–	6	8	–	8	8	9	9	9	11	11	14	18
V	–	mm	–	–	M16x1	–	M16x1	M16x1	M16x1	M16x1	M16x1	M16x1	–	M16x1	–
α	–	–	120°	120°	120°	–	120°	120°	120°	120°	120°	120°	120°	90°	60°
β	–	–	–	–	–	–	–	–	–	–	–	–	–	30°	–

A - 2/4 base jaws
Lever system

- Motion system by levers to assure a greater sliding of the sliders, high precision and safe gripping
- Self-centering chuck specific for **grinding** works
- Bar passage
- Special high wearing resisting jaw-bases
- **Pitch 2.5x60°**
- Sliders are finished in adjustment with the base to achieve high precision

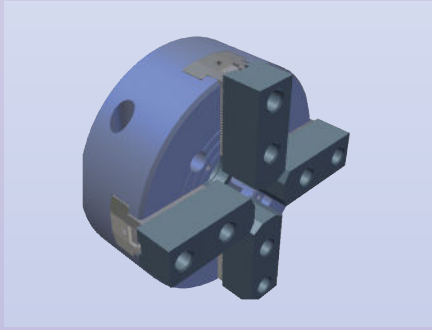

		AL2	AA2	AA4	AE2	AE4	AB2	AB4	AC2	AC4	AD2	AD4	AG2	AG4	AF2	AF4	AH4
Lever ratio	–	1.6	2	2	2.4	2.4	2.2	2.2	2.2	2.2	2.2	2.2	2.2	2.2	2.5	2.5	2.5
Gripping force ratio	–	1.1	1.3	1.3	1.56	1.56	1.43	1.43	1.43	1.43	1.43	1.43	1.43	1.43	1.62	1.62	1.62
Tooth pitch	mm	2.5x60°	2.5x60°	2.5x60°	2.5x60°	2.5x60°	2.5x60°	2.5x60°	2.5x60°	2.5x60°	2.5x60°	2.5x60°	2.5x60°	2.5x60°	2.5x60°	2.5x60°	2.5x60°
Speed	rpm	4000	4000	4000	3500	3500	3200	3200	2800	2600	2600	2600	2400	2400	2000	2000	1500
Weight	kg	2.5	4	4	5.5	5.4	8.5	8.2	12.4	12.1	19.2	19.2	22	22	47	48	79
Hardened jaws	Ref.	—	—	—	—	—	—	—	—	—	—	—	—	—	—	—	—
Soft jaws	Ref.	1314	636	636	1364	1364	1271	1271	1335	1335	1335	155	155	525	525	240	489
T-nut	Ref.	—	635	636	1298	1298	1298	1298	1298	156	156	156	156	156	241	241	490
Max draw bar pull	N	8900	10800	15410	9300	13300	15050	21500	15050	21500	24500	35000	24500	35000	33600	48000	80000
Max clamping force	N	9800	14000	20000	17500	25000	30100	43000	30100	43000	48300	69000	48300	69000	77000	110000	180000

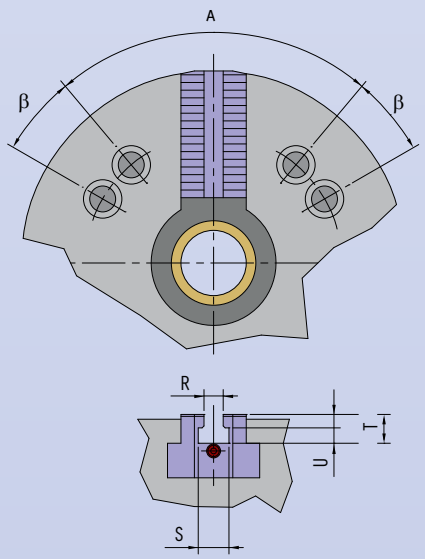

MOUNTING
FOR LATHE

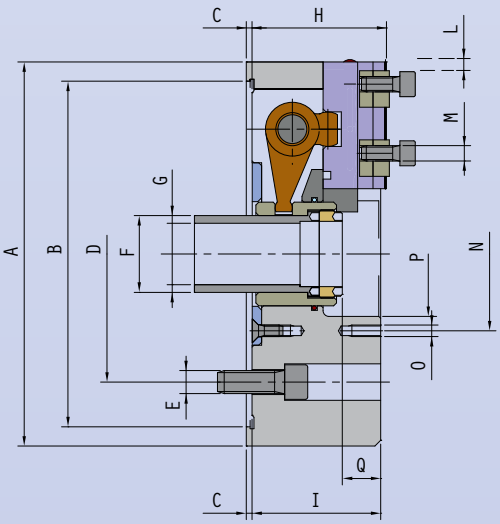

MOUNTING FOR
GRINDING

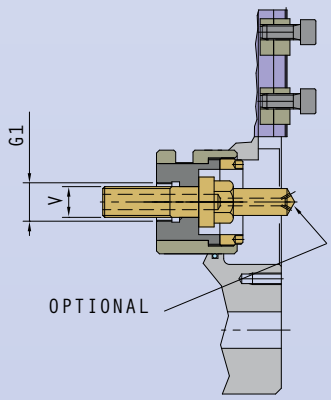

"Soft clamping" automatic chuck with bar passage

			AL2	AA2	AA4	AE2	AE4	AB2	AB4	AC2	AC4	AD2	AD4	AG2	AG4	AF2	AF4	AH4
A	Chuck size diameter	mm	90	120	120	140	140	170	170	200	200	230	230	250	250	300	300	400
B	H7	mm	80	110	110	130	130	160	160	180	180	210	210	230	230	280	280	380
C	–	mm	3	3	3	3	3	3	3	3	3	4	4	4	4	5	5	5
D	–	mm	60	82.6	70	82.6	82.6	104.78	104.78	133.4	133.4	133.4	133.4	171.4	171.4	171.4	171.4	235
E	–	mm	M8	M10	M8	M10	M10	M10	M10	M10	M12	M12	M12	M10	M10	M10	M10	M10
F	–	mm	M12	M10	M10	20	20	35	35	40	40	54	54	74	74	80	80	110
G	Chuck bore	mm	–	–	–	15	15	30	30	34	34	46	46	66	66	74	74	100
G1	–	mm	–	–	–	M20x1.5	M20x1.5	M20x1.5	M20x1.5	M20x1.5	M20x1.5	M20x1.5	M20x1.5	16	16	16	16	16
H	Tooth height	mm	47	55	55	59	59	70	70	70	70	84	84	84	84	105	105	126
I	Chuck width	mm	45	53	53	57	57	67	67	67	67	81	81	81	81	102	102	123
L	Jaw stroke	mm	3	3	3	4	4	4	4	4	4	5	5	5	5	6	6	7
M	–	mm	M6	M6	M6	M8	M8	M8	M8	M8	M8	M10	M10	M10	M10	M12	M12	M16
N	–	mm	–	–	–	–	–	–	70	80	80	100	100	115	115	–	–	–
O	–	mm	–	–	–	–	–	–	M5	M6	M6	M8	M8	M6	M6	–	–	–
P	–	mm	32	38	40	39	45	55	55	65	65	80	80	100	100	100	100	150
Q	–	mm	19	22	22	19	19	20	20	23	23	27	27	28	28	37	37	43
R	H8	mm	–	8	8	10	10	10	10	10	10	12	12	12	12	18	18	20
S	–	mm	–	12.5	12.5	16	16	16	16	16	16	19	19	19	19	25	25	32
T	–	mm	–	13	13	15	15	15	15	15	15	18	18	18	18	26	26	32
U	–	mm	–	6	6	8	8	8	8	8	8	9	9	9	9	11	11	14
V	–	mm	–	–	–	M16x1	M16x1	M16x1	M16x1	M16x1	M16x1	M16x1	M16x1	M16x1	M16x1	M16x1	M16x1	M16x1
α	–	–	180°	180°	90°	90°	90°	90°	90°	90°	90°	90°	90°	90°	90°	90°	90°	90°
β	–	–	–	–	–	–	–	–	–	–	–	–	–	–	–	–	–	–

GT - 2 base jaws
Wedge jaw-base system

- Motion system by wedge jaw-base to assure an "heavy duty" grip with high gripping force
- Big bore
- **Pitch 1.5x60°**

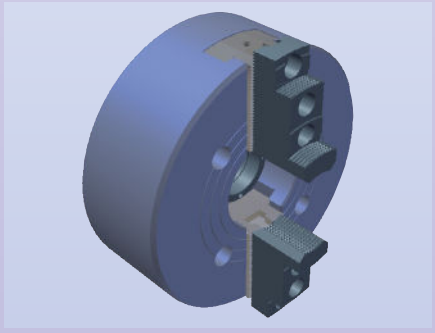

TECHNICAL FEATURES

Chuck size diameter		135	170	210	250	305	380
Jaw stroke	mm	5.4	5.5	7.4	8.8	10.6	10.6
Axial stroke	mm	10	12	16	19	23	23
Chucking diameter for soft jaws	Max.	135	165	210	210	304	381
	Min.	10	10	12	16	38	40
Max speed	rpm	7000	6000	4900	4200	3300	2500
Max draw bar pull	N	11580	14500	22500	28500	36670	47930
Max clamping force	N	23990	38000	56000	74000	96000	122360
Moment of inertia	kg.m²	0.68	0.225	0.66	1.23	2.8	9.09
Weight with soft jaws	kg	6.5	11.5	21.3	33.5	52	115

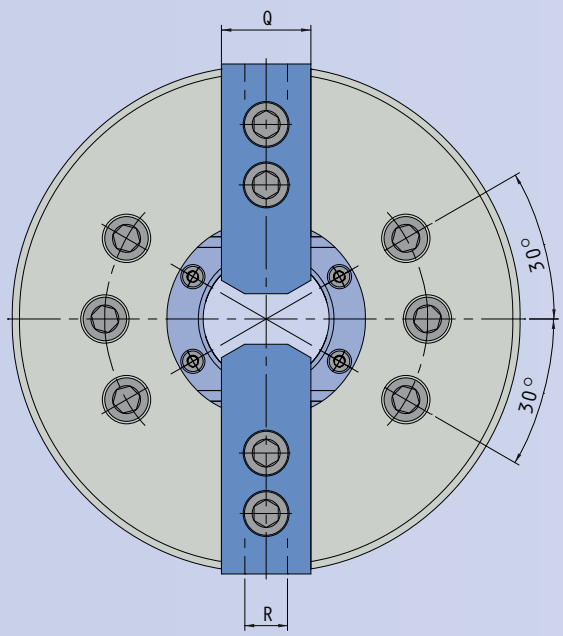

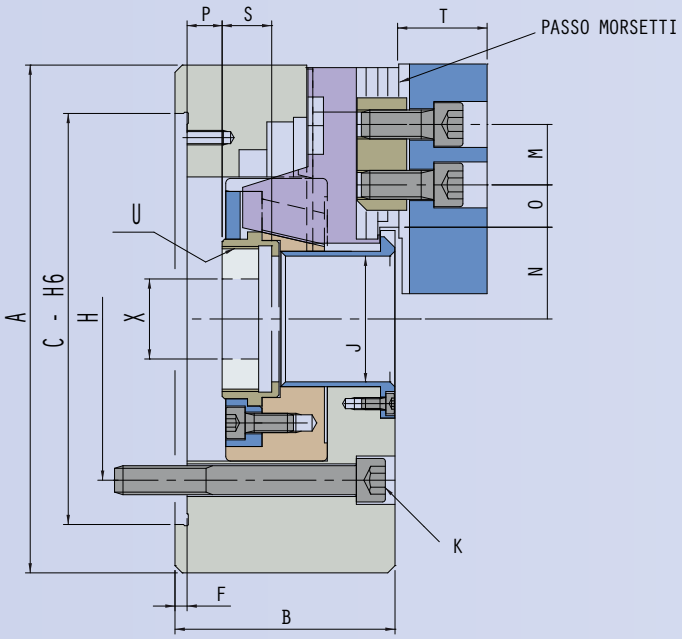

		A	B	C H6	F	H	J	K	L	M	N Max	N Min	O Max	O Min	P Max	P Min	Q	R	S	T	U Max	X
		mm	mm	mm	mm	mm	mm	mm	mm	mm	mm	mm	mm	mm	mm	mm	mm	mm	mm	mm	mm	mm
GT2	135	135	60	110	4	82.85	33	6-M10	16	14	26.5	23.8	19.5	6	16	6	23	10	20	26	M40x1.5	12
	170	169	81	140	5	104.78	45	6-M12	20	20	32	29.54	24	7.5	11	-1	32	12	19	29	M55x2.0	20
	210	210	91	170	5	133.35	52	6-M16	22	25	38.7	35	30	10.5	14.5	-1.5	37	14	23.5	39	M60x2.0	30
	250	254	100	220	5	171.45	75	6-M16	25	30	51	46.6	34.5	12	8.5	-10.5	42	16	25	43	M85x2.0	45
	305	304	110	220	6	171.45	91	6-M16	30	30	61.3	56	46.5	12	8	-15	52	21	28	51	M100x2.0	50
	380	381	133	300	6	235	117.5	6-M10	16	43	82	76.7	46.5	13.5	23	0	62	24	43	66	M130x2.0	60

GT - 3 base jaws
Wedge jaw-base system

- Motion system by wedge jaw-base to assure an "heavy duty" grip with high gripping force
- Big bore
- **Pitch 1.5x60°**

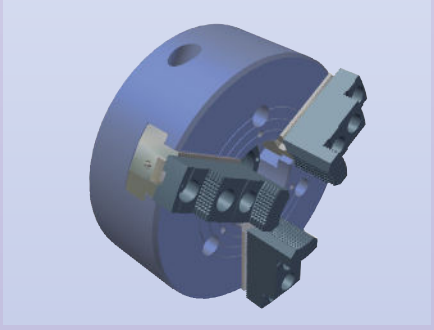

TECHNICAL FEATURES

Chuck size diameter		110	135	170	210	230	305	380
Jaw stroke	mm	5.4	5.4	5.5	7.4	8.8	10.6	10.6
Axial stroke	mm	10	10	12	16	19	23	23
Chucking diameter for soft jaws	Max.	135	135	165	210	254	304	381
	Min.	5	10	10	12	16	38	40
Max speed	rpm	8000	7000	6000	4900	4200	3300	2500
Max draw bar pull	N	14280	17840	22430	34670	43850	55080	72400
Max clamping force	N	29060	36710	58120	87690	113190	146860	183550
Moment of inertia	kg.m²	0.026	0.07	0.23	0.68	1.26	2.95	9.09
Weight with soft jaws	kg	4	6.7	12.5	22.6	37	61	120

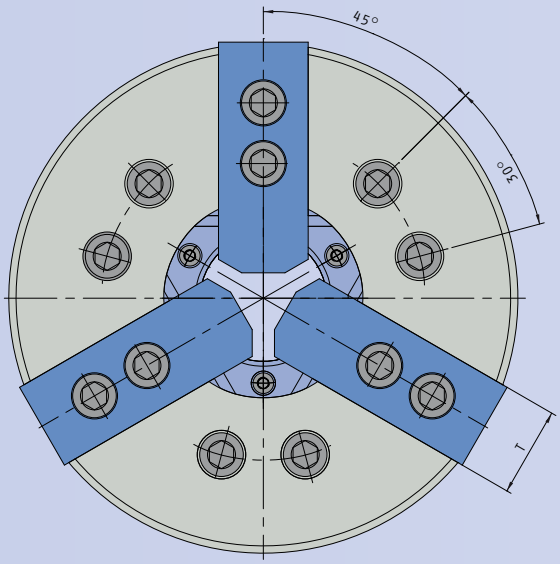

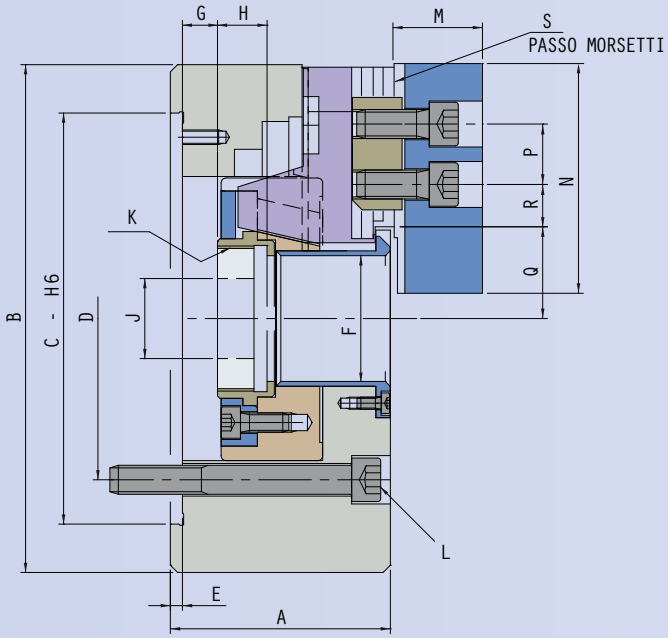

		A	B	C H6	D	E	F	G Max	G Min	H	J	K Max	L	M	N	P	Q Max	Q Min	R Max	R Min	S	T	U
		mm	mm	mm	mm	mm	mm	mm	mm	mm	mm	mm	mm	mm	mm	mm	mm	mm	mm	mm	mm	mm	mm
GT3	110	59	110	85	70.6	4	26	3.5	-6.5	17.5	12	M32x1.5	3 x M10x60	24	49.5	14	23	20.3	11.5	6.75	1.5	23	10
	135	60	135	110	82.55	4	33	1	-9	20	12	M32x1.5	3 x M10x60	26	54	14	26.5	23.8	19.75	7.75	1.5	23	10
	170	81	169	140	104.78	5	45	11	-1	19	20	M55x2	6 x M10x80	29	66	20	32	29.25	22.75	9.25	1.5	32	12
	210	91	210	170	133.35	5	52	14.5	-1.5	20.5	30	M60x2	6 x M12x90	39	95	25	38.7	35	29.75	14.75	1.5	37	14
	250	100	254	220	171.45	5	75	8.5	-10.5	25	45	M85x2	6 x M16x100	43	110	30	51	46.6	33.75	14.25	1.5	40	16
	305	110	304	220	171.45	6	91	8	-15	28	50	M100x2	6 x M16x110	51	111	30	61.3	56	45.75	15.75	1.5	50	21
	380	147	381	300	235	6	100	23	0	35	50	M130x2	6 x M20x150	61	135	43	70	64.7	54.75	20.25	1.5	50	24

Diaphragms - 3 base jaws

- Clamping system based on diaphragm deformation without any internal sliding
- Jaws fixed directly on the diaphragm body
- High clamping and centering accuracy
- Repeatability within 0.005mm
- Suitable for gear clamping on pitch diameter

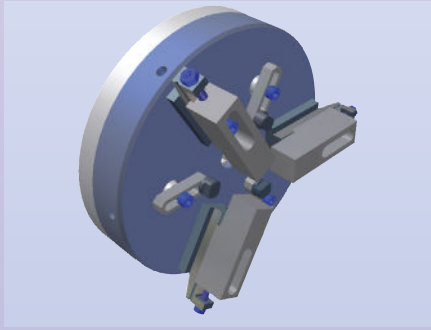

SLIDERS WITH MALE SLOT AND EXTERNAL ADJUSTMENT

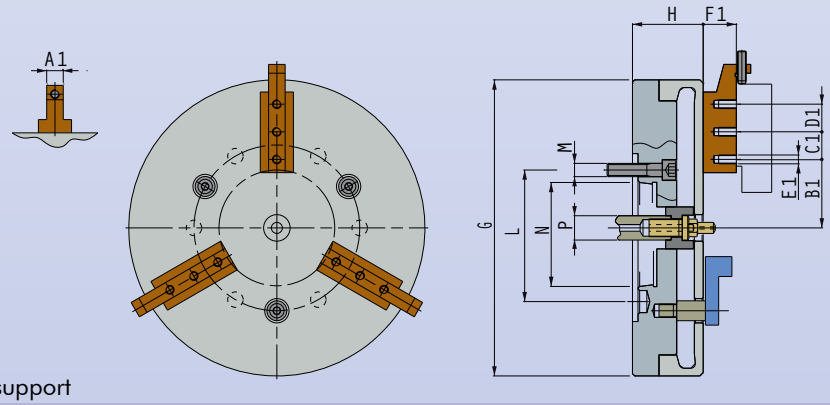

Options:
Central coolant through
Frontal braket for workpiece support

										ASA 5"			ASA 6"			ASA 8"			ASA 11"				
	A1 h6	B1	C1	D1	E1	F1	G	H	P	L	M	N	L	M	N	L	M	N	L	M	N	Weight	Jaw
	mm	mm	mm	mm	mm	mm	mm	mm	mm	mm	mm	mm	mm	mm	mm	mm	mm	mm	mm	mm	mm	kg	Ref.
Diaphragm 200	15	40	22	22	M6	25	200	49	22	104.8	M10	82.56	—	—	—	—	—	—	—	—	—	14	1923
Diaphragm 250	15	53	25	25	M8	30	250	60	—	—	—	—	—	—	—	171.4	M16	139.71	—	—	—	18	1584
Diaphragm 268	15	62	25	25	M8	30	268	64	22	104.8	M10	82.56	133.4	M12	106.37	—	—	—	—	—	—	21	1584
Diaphragm 300	15	75	25	25	M8	30	300	64	22	104.8	M10	82.56	133.4	M12	106.37	171.4	M16	139.71	—	—	—	26	1584
Diaphragm 400	20	110	30	30	M10	40	400	72	25	—	—	—	—	—	—	171.4	M16	139.71	235	M20	196.86	34	1585

SLIDERS WITH FEMALE SLOT

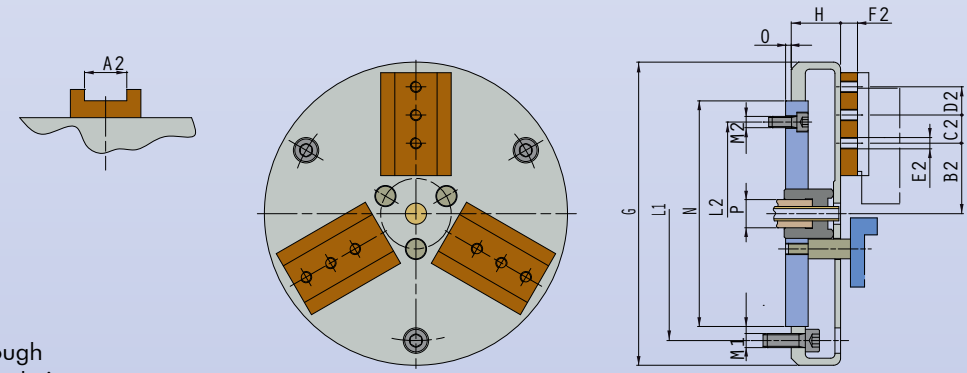

Options:
Central coolant through
Frontal braket for workpiece support

	A2 H6	B2	C2	D2	E2	F2	G	H	L1	M1	L2	M2	N g6	O	P	Weight	Jaw
	mm	mm	mm	mm	mm	mm	mm	mm	mm	mm	mm	mm	mm	mm	mm	kg	Ref.
Diaphragm 150	20	43	15	—	M6	11	150	25	124	3x M6	80	3x M6	105	4	20	3,5	1583
Diaphragm 180	20	43	15	15	M6	11	180	28	145	3x M10	95	3x M6	125	4	20	4	1583
Diaphragm 180/4	20	43	15	15	M8	11	180	28	145	3x M10	82.5	3x M10	ASA 4"	16	20	5	1583
Diaphragm 215	30	50	20	20	M8	12	215	35	180	3x M10	130	3x M8	160	4	20	6,5	1582

O Series - 3 base jaws

- Clamping system based on diaphragm deformation without any internal sliding
- Jaws fixed directly on the diaphragm body
- High clamping and centering accuracy
- Repeatability within 0.005mm
- "A1" type jaws are with external adjustment
- Built-in pneumatic cylinder and external collector

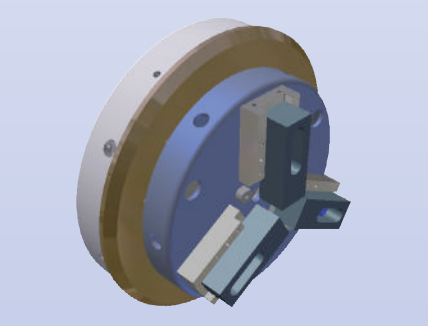

	A1 h6	B1	C1	D1	E1	F1	A2 H6	B2	C2	D2	E2	F2	G	H	I	L	M	N H7	O	P	Q	Thrust section	Pressure	Weight	Jaws
	mm	mm	mm	mm	mm	mm	mm	mm	mm	mm	mm	mm	mm	mm	mm	mm	mm	mm	mm	mm	mm	cm²	bar	kg	Ref.
OA	15	62	25	25	M8	30	–	–	–	–	–	–	270	75	270	200	6x M8	170	4	50	G 1/8"	226	6	22	1584
OB	15	40	15	15	M6	25	–	–	–	–	–	–	200	73	270	170	6x M8	150	4	50	G 1/8"	157	6	18.5	1923
OC	–	–	–	–	–	–	20	43	15	–	M6	11	150	77	198	124	6x M8	140	3	25	G 1/8"	87	6	13	1583

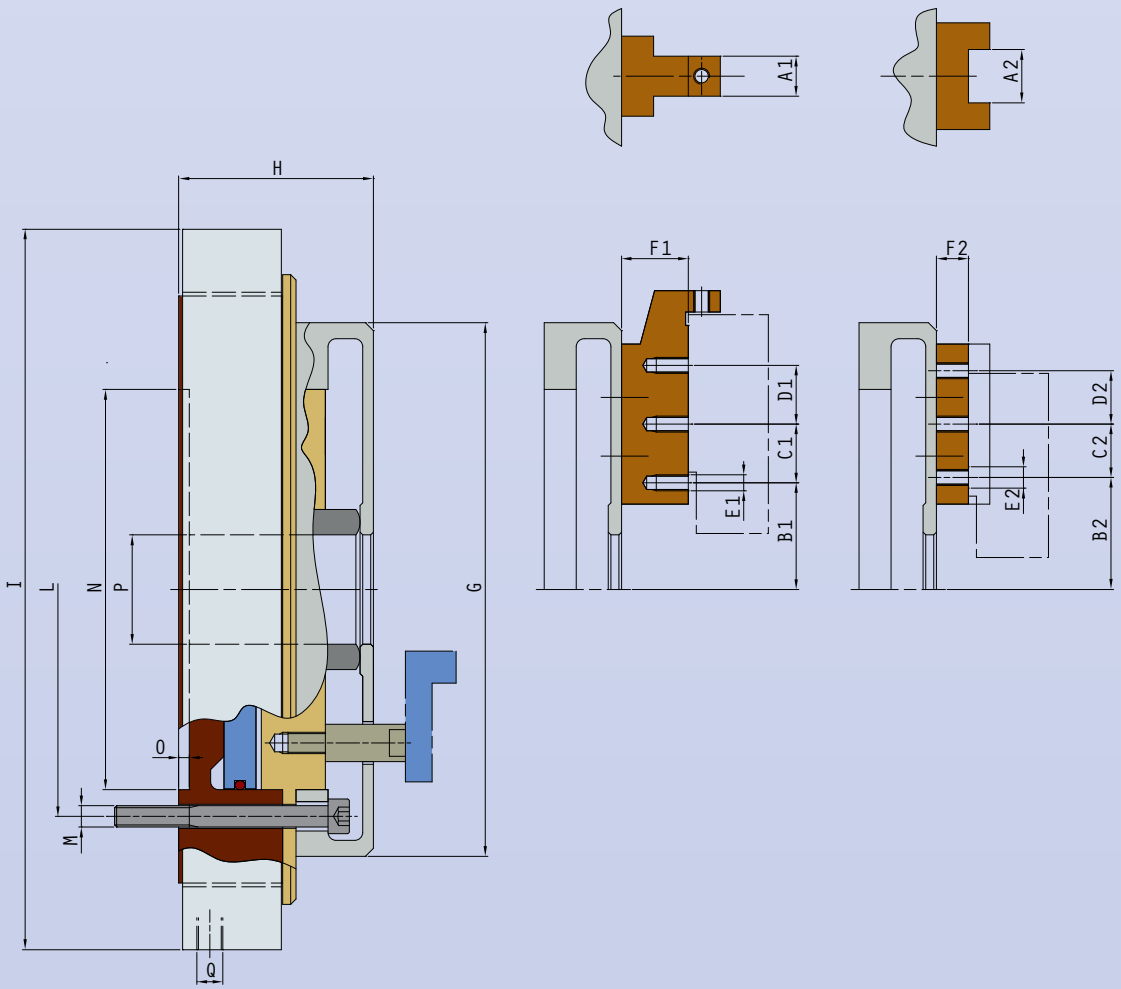

Carriers - 3 base jaws

- Carrier with central drill for irregular workpiece
- Built-in pneumatic cylinder and external collector

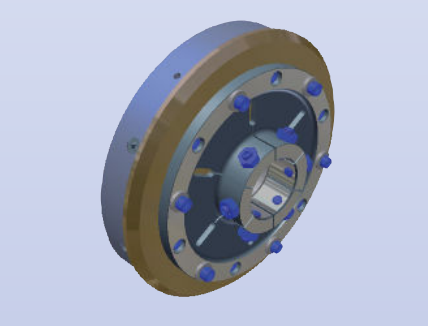

BASE SYSTEM										CARRIER WITH SCREWS							CARRIER WITH SECTORS							COMPLETE CODE
	Code	A	B	C	D	E H7	F	G	H		Code	I1 Max	L1	M1	O	N		Code	I2 Max	L2	M2	P	Q	
OX	G64.000OX	198	55	124	3x M8	140	3	37	G 1/8"	X1	G64.000OX1	20	150	25	7	6x M6	—	—	—	—	—	—	—	OX/X1
										X2	G64.000OX2	42	150	25	7	6x M6	—	—	—	—	—	—	—	OX/X2
										—	—	—	—	—	—	—	X3	G64.000OX3	25	150	26	13	13	OX/X3
OY	G64.000OY	130	51	82	4x M8	125	3	30	G 1/8"	—	—	—	—	—	—	—	Y1	G64.000OY1	19	98	—	9	—	OY/Y1
										Y2	G64.000OY2	31	98	21	6	4x M5	—	—	—	—	—	—	—	OY/Y2
OZ	G64.000OZ	278	50.5	200	6x M8	154	5	39	G 1/8"	—	—	—	—	—	—	—	Z1	G64.000OZ1	40	220	38	21	17	OZ/Z1
										Z2	G64.000OZ2	32	220	33	5	6x M6	—	—	—	—	—	—	—	OZ/Z2
										Z3	G64.000OZ3	46	220	27	7	6x M6	—	—	—	—	—	—	—	OZ/Z3
										Z4	G64.000OZ4	46	220	36	7	6x M6	—	—	—	—	—	—	—	OZ/Z4
										Z5	G64.000OZ5	60	220	37	9	6x M6	—	—	—	—	—	—	—	OZ/Z5
										—	—	—	—	—	—	—	Z6	G64.000OZ6	60	220	36	19	17	OZ/Z6

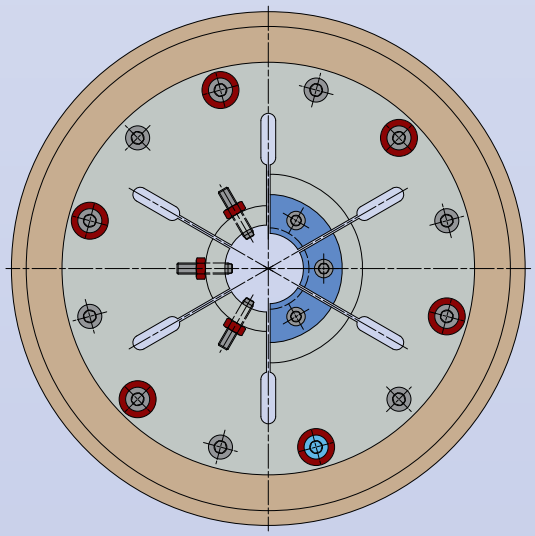

BASE SYSTEM

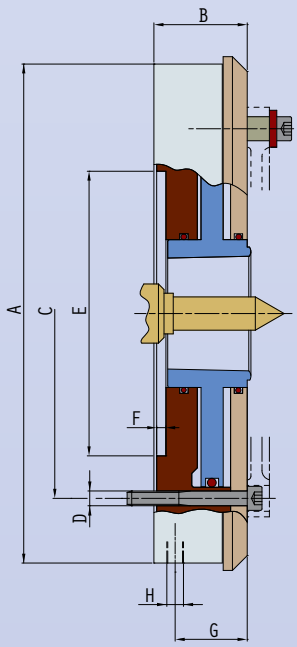

CARRIER WITH SCREWS

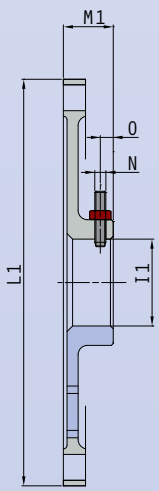

CARRIER WITH SECTORS

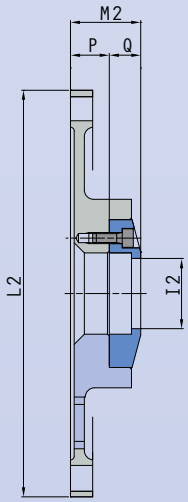

PR - 3 base jaws
Low rotation speed

- Self-centering 3 base jaws chuck
- Built-in pneumatic cylinder with external collector and safety valves
- No resistence moment during the rotation
- Bar passage
- Special high waring resisting jaw-bases
- **Pitch 1/16"x90° - 1.5x60°**
- High speed options

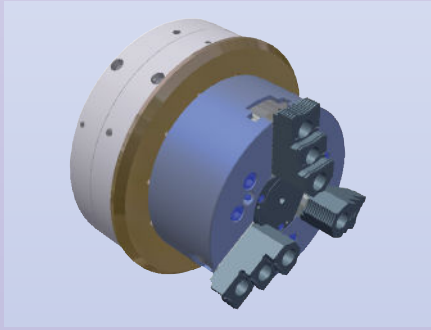

		PR130	PR165	PR210	PR250	PR315
Piston section	cm²	91	203	171	260	462
Max pressure	bar	8	8	8	8	8
Clamping force at 8 bar	N	22800	38000	32000	48700	86500
Weight	kg	16	30	43	65	110
Max speed	rpm	200	200	200	200	200
High speed optiion	rpm	3000	2800	2800	2300	2100

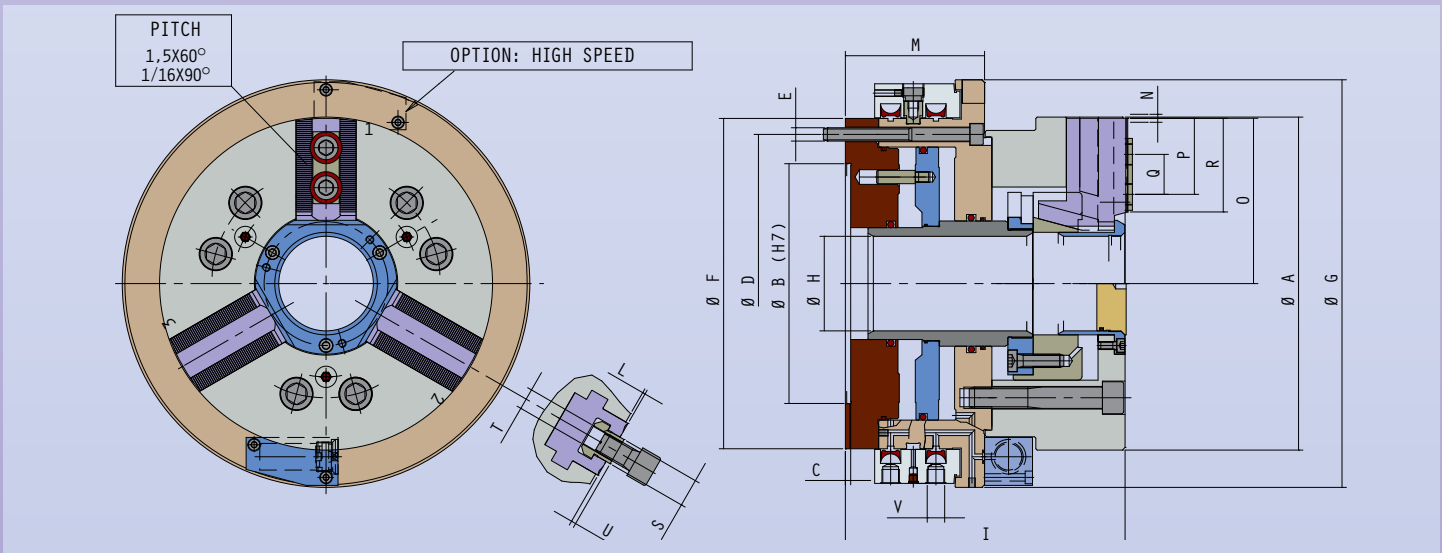

		PR130	PR165	PR210	PR250	PR315
A	mm	130	165	210	250	315
B	mm	100	100	94	180	220
C	mm	4	5	3	4	5
D	mm	130	190	190	224	290
E	mm	6x M8	6x M8	6x M8	6x M10	6x M12
F	mm	198	210	210	248	315
G	mm	198	268	282	306	388
H (Bar passage)	mm	32	44	66	70	95
I	mm	136	146	179	210	224
L	mm	2	5	2	2	4
M	mm	68	75	85	104	111
N (Stroke)	mm	3	3.7	5.2	6	6
O (+)	mm	65	81.4	101.8	124.1	156.7
P (Min / Max)	mm	20 / 27.5	22 / 34	33 / 44.5	35 / 57.1	35 / 74.9
Q	mm	15	16	23	30	30
R	mm	35	42	58	70.3	85
S H7	mm	12	14	17	21	21
T	mm	M8	M10	M12	M16	M16
U	mm	2.5	2.5	3	3.5	3.5
V	mm	G 1/8"	G 1/8"	G 1/8"	G 1/4"	G 1/4"
T-nut	Ref.	F7502210	F7502027	F7502038	F7502051	F7502051
Soft jaws	Ref.	F7302214A	F7302034A	F7302047A	F7302060A	F7302060A
Hardened jaws	Ref.	F7102211A	F7102031A	F7102044A	F7102057A	F7102057A

DX - 3 base jaws
Heavy duty clamping

- Static platform with pneumatic control
- Vertical position
- Motion system by wedge jaw-base
- Bar passage
- **Pitch 1/16”x90° - 1.5x60°**

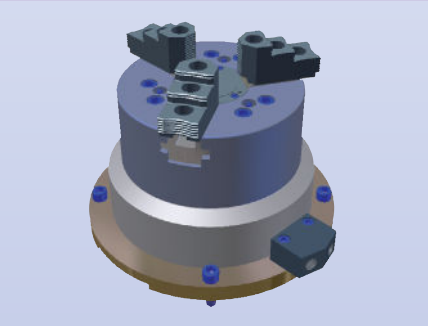

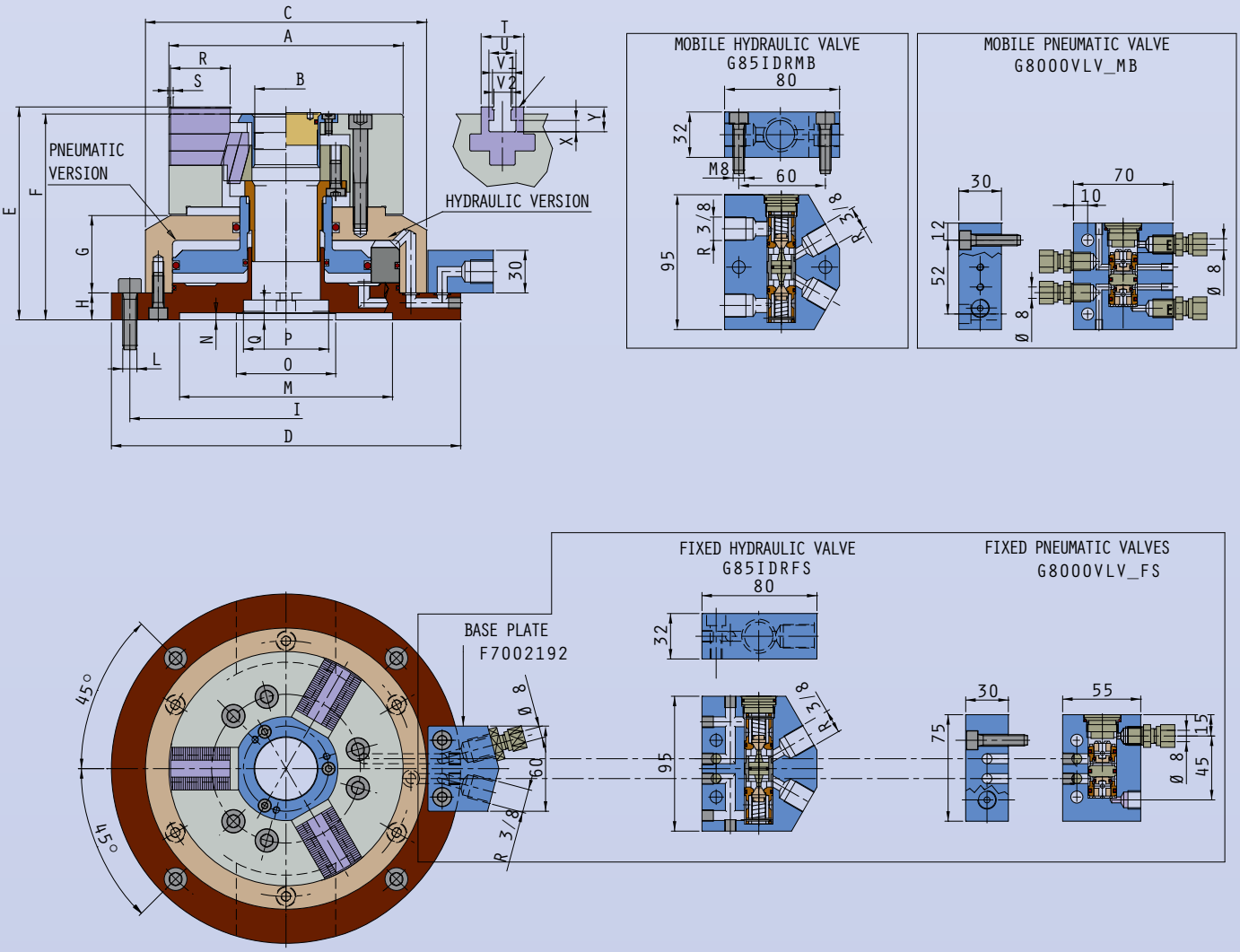

SELF-CENTERING STATIC PLATFORM WITH BUILT-IN PNEUMATIC CYLINDER

	A	B	C	D	E	F	G	H	I	L	M	N	O	P H7	Q	R	S Stroke	T	U	V1	V2	X	Y	Pitch
	mm	mm	mm	mm	mm	mm	mm	mm	mm	mm	mm	mm	mm	mm	mm	mm	mm	mm	mm	mm	mm	mm	mm	mm
DX3.130P	130	32	158	206	144	142	55	19	180	M10	110	5	80	50	13	35	3	30	19	12	10	7.5	14.5	1/16"x90° 1.5x60°
DX3.165P	165	44	198	246	150	145	54.5	19	220	M10	150	5	70	60	14	42	3.8	30	19	14	12	8	17.5	1/16"x90° 1.5x60°
DX3.210P	206	52	238	294	183	181	68	21	268	M12	176	7	90	70	15	58	5.4	35	21.5	17	14	9	18.5	1/16"x90° 1.5x60°
DX3.250P	250	71	276	338	207	205	76	23	310	M16	196	7	120	100	15	70	6	45	29.5	21	-	12	22.5	1/16"x90° 1.5x60°
DX3.315P	315	95	350	406	238	234	89	32	380	M16	240	8	120	100	18	86	6	50	30	-	21	12	22.5	1/16"x90° 1.5x60°

	Piston opening section	Piston closure section	Opening force	Closure force	Max pressure
	cm^2	cm^2	N	N	bar
DX3.130P	101	93	17500	15980	8
DX3.165P	178	169	30000	28300	8
DX3.210P	281	269	44400	42300	8
DX3.250P	357	337	65000	58400	8
DX3.315P	558	527	87900	83000	8

SELF-CENTERING STATIC PLATFORM WITH BUILT-IN HYDRAULIC CYLINDER

	A	B	C	D	E	F	G	H	I	L	M	N	O	P H7	Q	R	S Stroke	T	U	V 1	V 2	X	Y	Pitch
	mm	mm	mm	mm	mm	mm	mm	mm	mm	mm	mm	mm	mm	mm	mm	mm	mm	mm	mm	mm	mm	mm	mm	mm
DX3.130I	130	32	158	206	144	142	55	19	180	M10	110	5	80	50	13	35	3	30	19	12	10	7.5	14.5	1/16"x90° 1.5x60°
DX3.165I	165	44	198	246	150	145	54.5	19	220	M10	150	5	70	60	14	42	3.8	30	19	14	12	8	17.5	1/16"x90° 1.5x60°
DX3.210I	206	52	238	294	183	181	68	21	268	M12	176	7	90	70	15	58	5.4	35	21.5	17	14	9	18.5	1/16"x90° 1.5x60°
DX3.250I	250	71	276	338	207	205	76	23	310	M16	196	7	120	100	15	70	6	45	29.5	21	-	12	22.5	1/16"x90° 1.5x60°
DX3.315I	315	95	350	406	238	234	89	32	380	M16	240	8	120	100	18	86	6	50	30	-	21	12	22.5	1/16"x90° 1.5x60°

	Piston opening section	Piston closure section	Opening force	Closure force	Max pressure
	cm^2	cm^2	N	N	bar
DX3.130I	80	71	5832	51760	30
DX3.165I	90.1	79.9	6050	53500	30
DX3.210I	151	134	9925	90000	30
DX3.250I	185	165	13750	122500	30
DX3.315I	224	194	15000	130950	30

B Series
Without bar passage

- Rotating pneumatic cylinder without bar passage
- Simple chamber double-acting
- Built-in distributor
- Stroke control option (see page 66)

The same cylinders can be supplied with safety valves (see page 66)

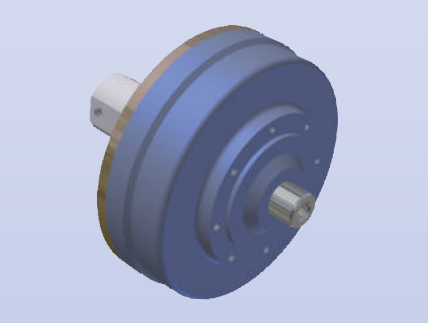

		BA	BB	BC	BD
Piston dia.	mm	102	155	190	250
Thrust section	cm^2	68	168	248	435
Max pressure	bar	7	7	7	7
Max speed	rpm	2500	2500	2000	1800
Weight	kg	2.3	5	9.7	14
Flange	Rif.	200	209	215	220

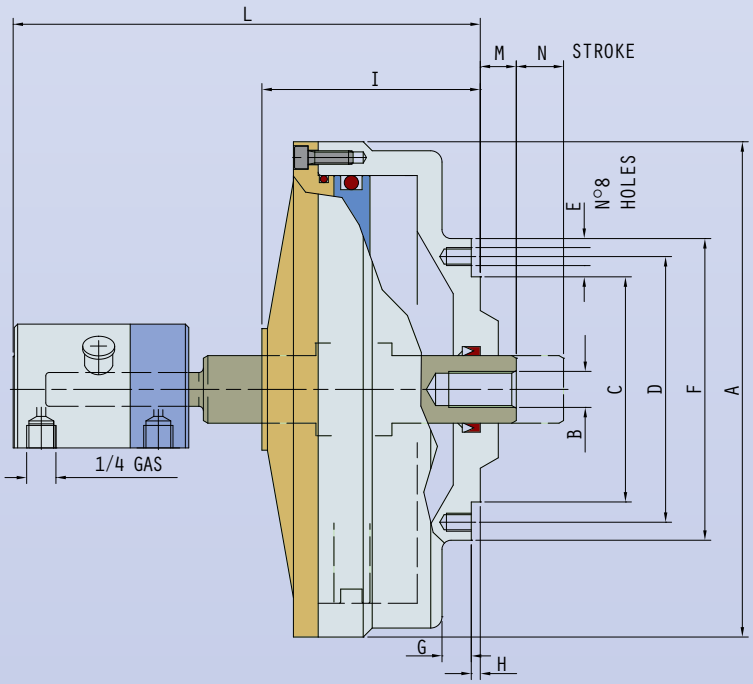

		BA	BB	BC	BD
A	mm	120	182	220	280
B	mm	M12x1.5	M16x1.5	M16x1.5	M16x1.5
C g6	mm	90	75	100	100
D	mm	110	96	118	118
E	mm	M6	M8	M8	M8
F	mm	—	116	134	145
G	mm	—	17	13	10
H	mm	3	4	4	4
I	mm	72	95	105	105
L	mm	168	195	214	214
M	mm	5	5	6	6
N	mm	13	19	21	21

BX Series

- Pneumatic cylinders double-acting
- Coolant through facility

The same cylinders can be supplied with safety valves (see page 66)

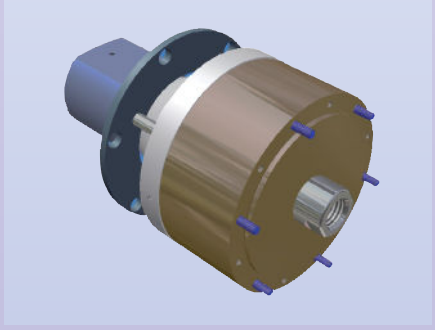

		BXO	BXN	BXP
Piston dia.	mm	101	155	190
Thrust section	cm^2	65	175	275
Max pressure	bar	7	7	7
Max speed	rpm	1500	1500	1500
Max thrust force	N	4450	12000	18800
Weight	kg	3.2	5.3	7.5
Flange	Rif.	1227	1227	—

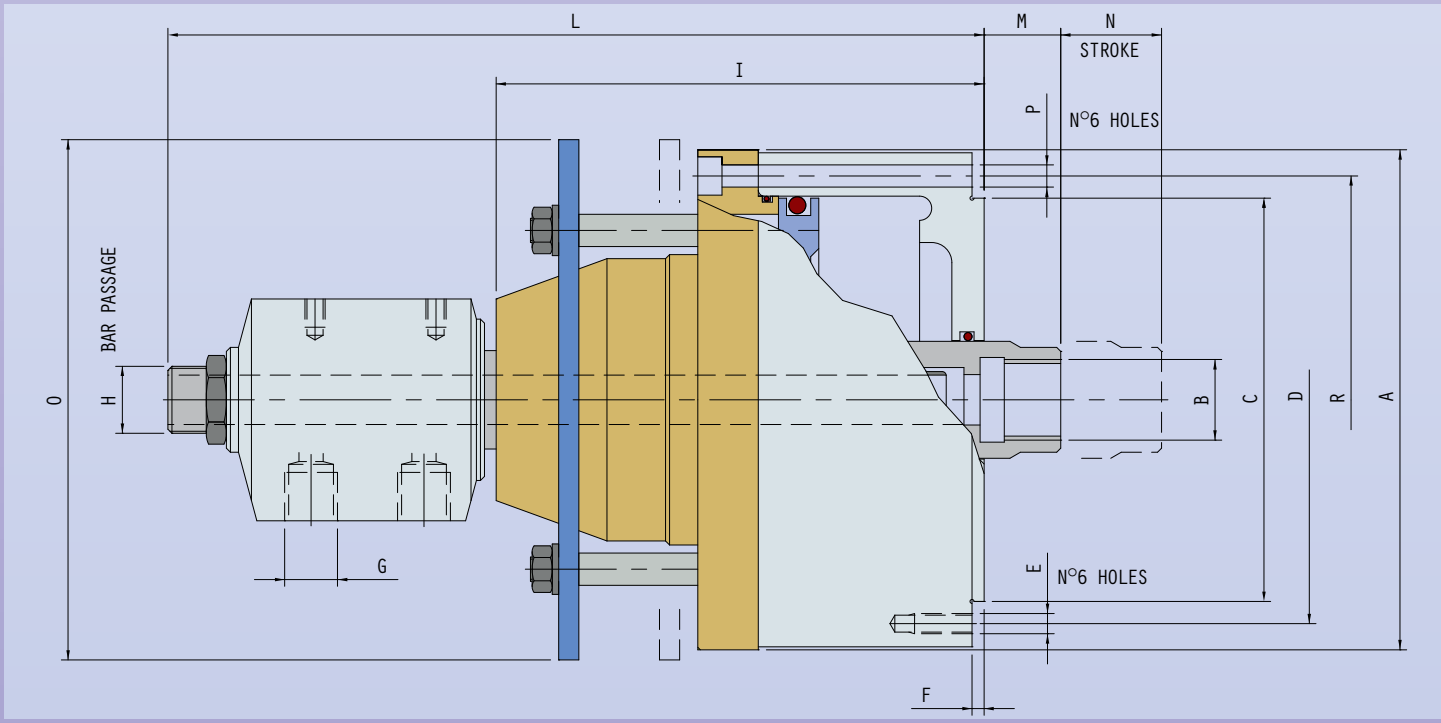

		BXO	BXN	BXP
A	mm	124	179	214
B	mm	M20x2.5	M20x2.5	M20x2.5
C g6	mm	100	100	100
D	mm	111	111	111
E	mm	M5	M5	M6
F	mm	3	3	3
G	mm	G 1/4″	G 1/4″	G 1/4″
H	mm	12.25	12.25	12.25
I	mm	121	125	125
L	mm	198	202	202
M	mm	19	19	19
N	mm	25	25	25
O	mm	129	129	129
P	mm	5.5	6.5	5.5
R	mm	111	165	200

BHS Series
High rotation speed

- Pneumatic cylinder for very high roation speed
- Coolant through facility
- Safety valves
- Stroke control predisposition

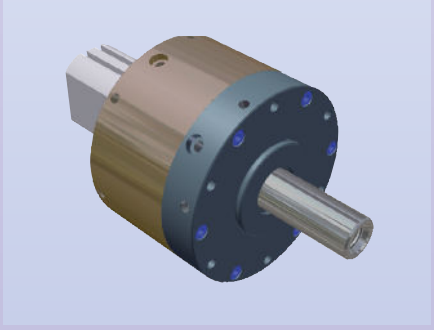

		G33BHS130	G33BHS150	G33BHS200
Piston thrust section	cm²	120	164	301
Piston tractive section	cm²	123	167	304
Max speed	rpm	4500	4500	4500
Max pressure	bar	8	8	8
Max thrust force	N	9100	12450	22900
Max tractive section	N	9300	12700	23000
Weight	kg	9	12	17.5

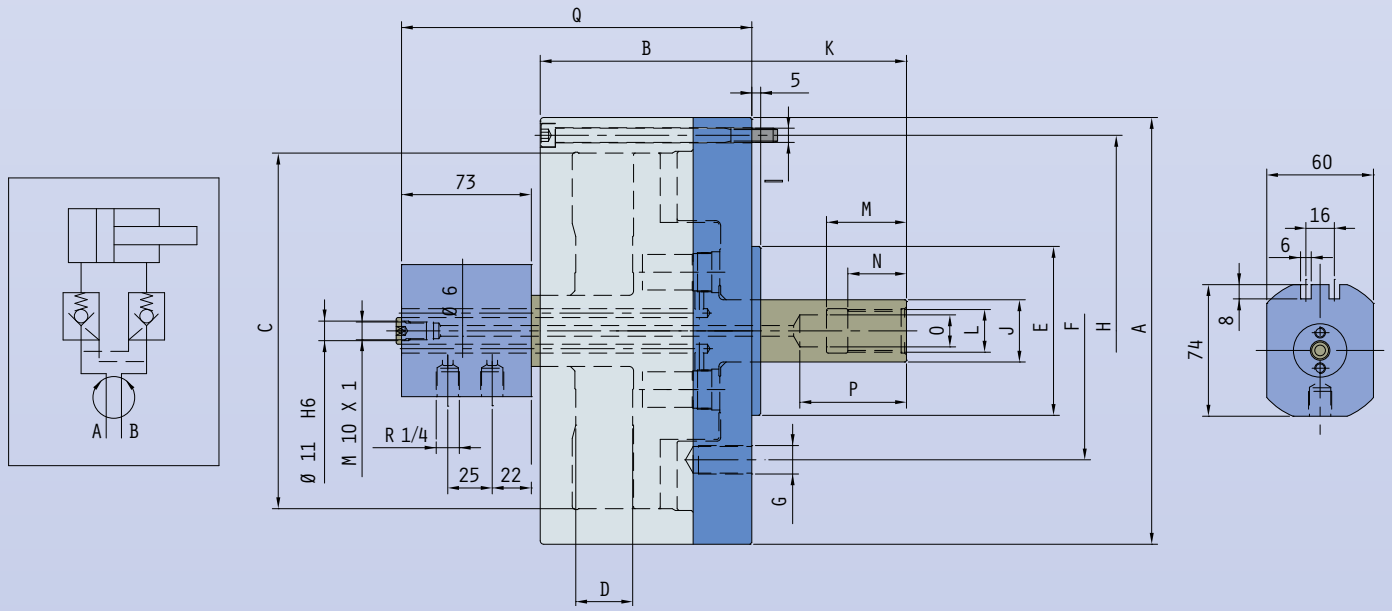

		G33BHS130	G33BHS150	G33BHS200
A	mm	170	190	240
B	mm	119	119	119
C	mm	130	150	200
D (Stroke)	mm	32	32	32
E −0.01/−0.02	mm	80	95	95
F	mm	—	—	145
G	mm	—	—	4x M6
H	mm	150	170	220
I	mm	6x M8	6x M8	6x M8
J	mm	35	35	35
K (Min / Max)	mm	55 / 87	55 / 87	55 / 87
L	mm	M24	M24	M24
M	mm	45	45	45
N	mm	33	33	33
O H8	mm	18	18	18
P	mm	60	60	60
Q (Min / Max)	mm	5 / 37	5 / 37	5 / 37

RI Series
High rotation speed

- Hydraulic cylinder suited for high rotation speed
- High stroke speed
- Coolant through facility
- Safety valves
- Piston stroke control

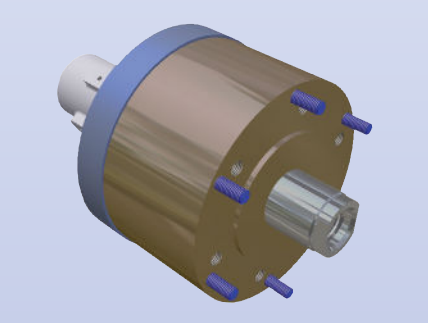

	Thrust section	Max pressure	Max speed	Rated speed	Moment of inertia	Max traction force	Weight
	cm²	bar	rpm	rpm	kg.m²	N	kg
RI130	123	40	6300	4000	0.1	48000	19.5

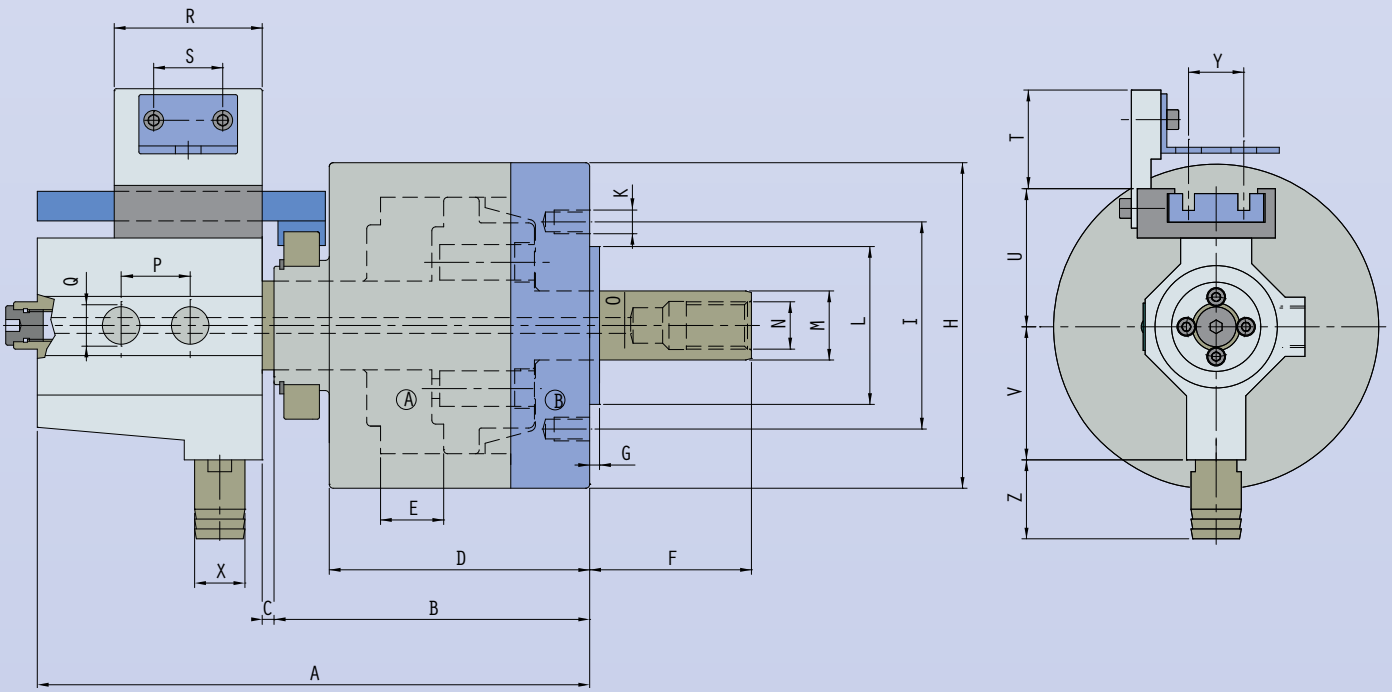

	A Max	A Min	B	C Max	C Min	D	E Stroke	F Max	F Min	G	H	I	K	L g5	M	N	O	P	Q	R	S	T	U	V	Z	X	Y
	mm	mm	mm	mm	mm	mm	mm	mm	mm	mm	mm	mm	mm	mm	mm	mm	mm	mm	mm	mm	mm	mm	mm	mm	mm	mm	mm
RI130	230	248	160	38	6	132	32	82	50	5	165	105	4x M12	80	35	M24	8	35	G 1/2"	75	35	50	70	68	40	25.5	28

XT Series
Extra compact

- Rotating hydraulic cylinder
- Large bar passage
- Carter for coolant recovering
- With safety valves
- Piston stroke control
- Highest speed
- Reduced lenght and moment of inertia

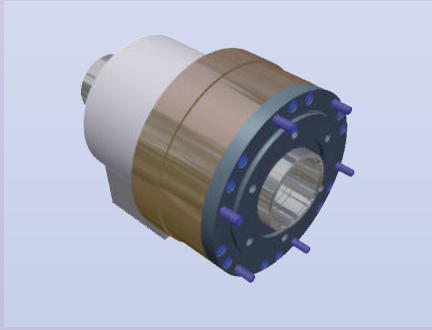

		XT 36-100	XT 46-100	XT 52-148	XT 67-198	XT 76-198	XTL 91-252
Piston sect. area	cm^2	Thrust 100 Traction 89	Thrust 100 Traction 89	Thrust 148 Traction 138	Thrust 198 Traction 183	Thrust 198 Traction 183	Thrust 252 Traction 234
Max pressure	bar	40	40	40	40	40	40
Max traction force	N	320	320	410	658	658	840
Max speed	rpm	8000	8000	6500	5500	5500	3800
Weight	kg	9	9	13	18.7	18.7	33
Moment of inertia	$kg.m^2$	0.071	0.071	0.129	0.251	0.251	0.61
Drainage	at 30 bar	3	3	3.8	4.1	4.1	4.5

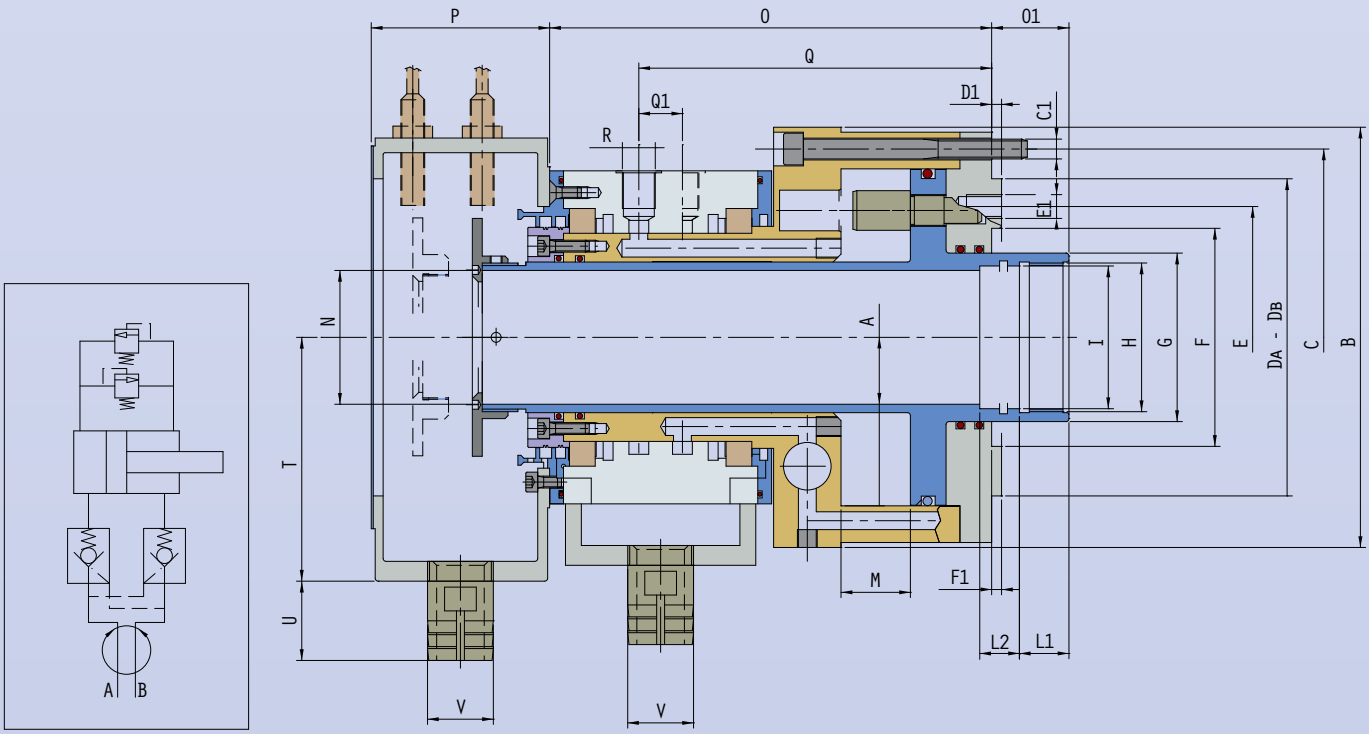

Hydraulic cylinders with bar passage

			XT 36-100	XT 46-100	XT 52-148	XT 67-198	XT 76-198	XTL 91-252
A		mm	125	125	150	175	175	204
B		mm	165	165	185	215	215	240
C		mm	147	147	165	195	195	—
C1		mm	6x M8	6x M8	6x M8	6x M10	6x M10	—
Da g6		mm	100	100	130	160	160	180
Db g6		mm	110	130	140	—	—	—
D1		mm	5	5	5	4	4	5
E		mm	130	130	170	190	190	215
E1		mm	12x M10	12x M10	12x M10	12x M10	12x M10	12x M12
F		mm	80	80	85	120	120	140
F1		mm	8	8	6	5	5	6
G		mm	65	65	70	95	95	110
H		mm	M44x1.5	M55x2	M60x2	M75x2	M85x2	M100x2
I		mm	M42x1.5	50 H8	55 H8	M72x1.5	80 H8	95 H8
L1		mm	30	30	30	35	35	35
L2		mm	15	15	15	15	15	15
M (Stroke)		mm	15 Option 26	15 Option 26	22	25	25	30
N H8		mm	46	46	52	75	75	91
O		mm	139.5	139.5	150.5	169.5	169.5	255
O1	Max Min	mm	14 -1	14 -1	21 -1	24 -1	24 -1	30 0
P		mm	84	84	66	90.5	90.5	90
Q		mm	115.5	115.5	122	135	135	192
Q1		mm	10.5	10.5	11.5	9.5	9.5	21
R		mm	G 3/8″	G 3/8″	G 1/2″	G 1/2″	G 1/2″	G 1/2″
T		mm	131	131	131	155	155	175
U		mm	55	55	55	55	55	55
V		mm	33	33	33	33	33	33

CL Series
Quick clamp

- Quick clamp collet
- Collet reference DIN 6343
- Cylindrical holder

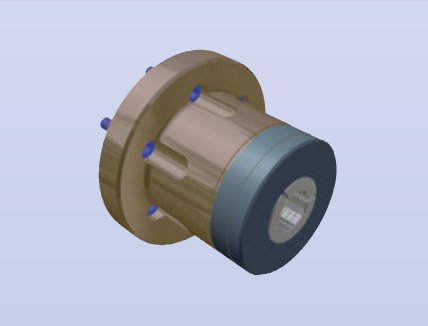

	Pinza	A	B	C	D	E	F	G	H	K	L	M		d	O	N	P	Z
												Max	Min	Max				
		mm	mm	mm	mm	mm	mm	mm	mm	mm	mm	mm	mm	mm	mm	mm	mm	mm
CL36 140D	171E	155	140	126	104.8	M66x1.5	62	M55x2	30	23	113.5	5	0	36	103	23	4x M10x25	6
C42 140D	173E	155	140	126	104.8	M66x1.5	62	M55x2	30	23	113.5	5	0	42	103	23	4x M10x25	6
CL52 170D	177E	185	170	152	133.4	M90x1.5	90	M85x2	30	31	139	11	6	52	132	30	4x M12x25	6
CL60 170D	185E	185	170	152	133.4	M90x1.5	90	M85x2	30	31	139	11	6	60	132	30	4x M12x25	6

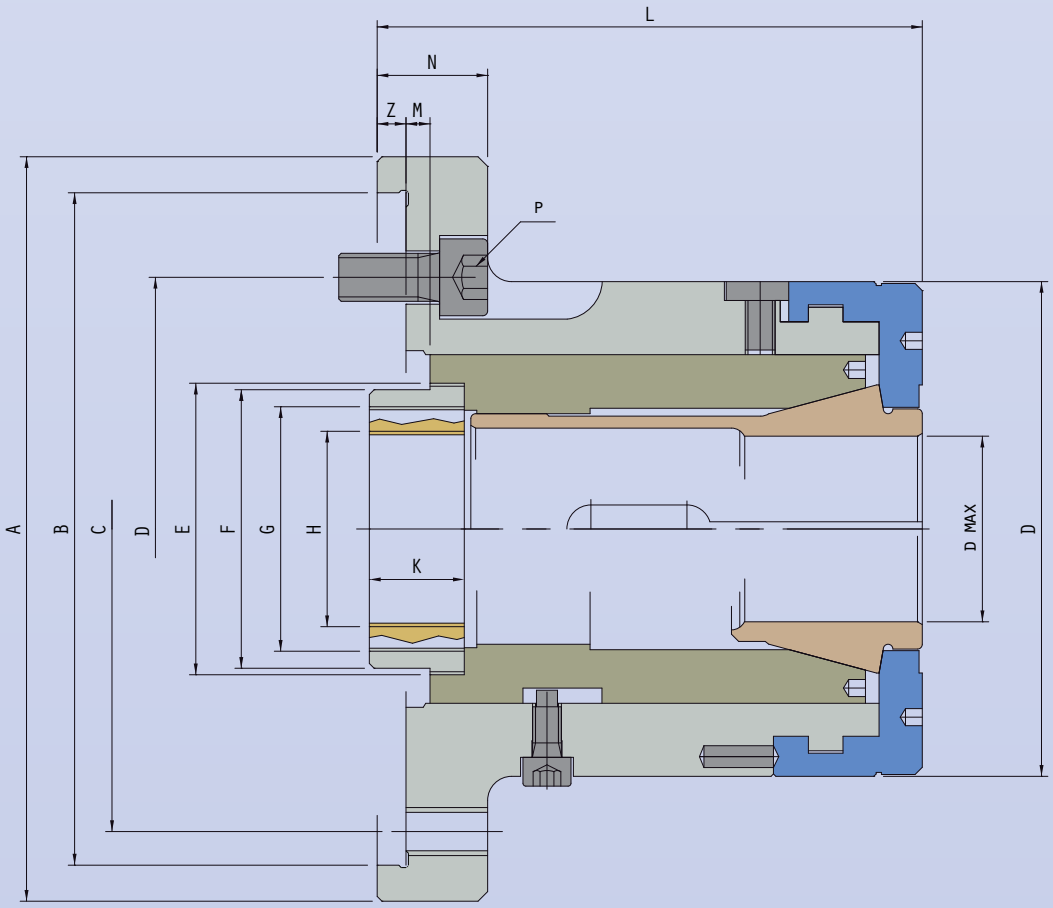

CL-A Series
Quick clamp

- Quick clamp collet
- Collet reference DIN 6343
- ISO A holder

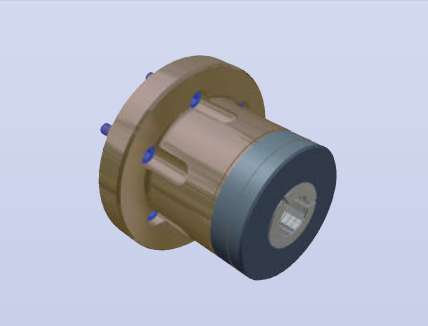

	Collet	A	B	C	D	E	F	G	K	L	M		d	O	N	P	Q
											Max	Min	Max				
		mm	mm	mm	mm	mm	mm	mm	mm	mm	mm	mm	mm	mm	mm	mm	mm
CL36-A4	171E	112	82.6	63.5	M50x1.5	45	M40x1.5	20	23	110	21.5	16.5	30	87	30	3x M10x30	8
CL36-A5	173E	135	104.8	82.56	M65x1.5	62	M55x2	30	23	129	26	21	36	103	27	4x M10x30	8
CL42-A5	177E	135	104.8	82.56	M65x1.5	62	M55x2	30	23	129	26	21	42	103	27	4x M10x30	8
CL42-A6	185E	170	133.4	106.36	M65x1.5	66	M60x2	30	23	133	29	24	42	103	32	4x M12x30	8
CL52-A5	185E	135	104.8	82.56	M70x1.5	62	M55x2	30	23	129	26	21	52	113	27	4x M12x30	8
CL52-A6	185E	170	133.4	105.35	M90x1.5	66	M60x2	30	31	155	33	28	52	132	27	4x M12x30	8
CL60-A6	185E	170	133.4	105.35	M90x1.5	66	M60x2	30	31	155	33	28	60	132	27	4x M12x30	8
CL60-A8	185E	220	171.4	139.7	M90x1.5	90	M85x2	30	31	155	33	28	60	132	37	4x M16x35	8

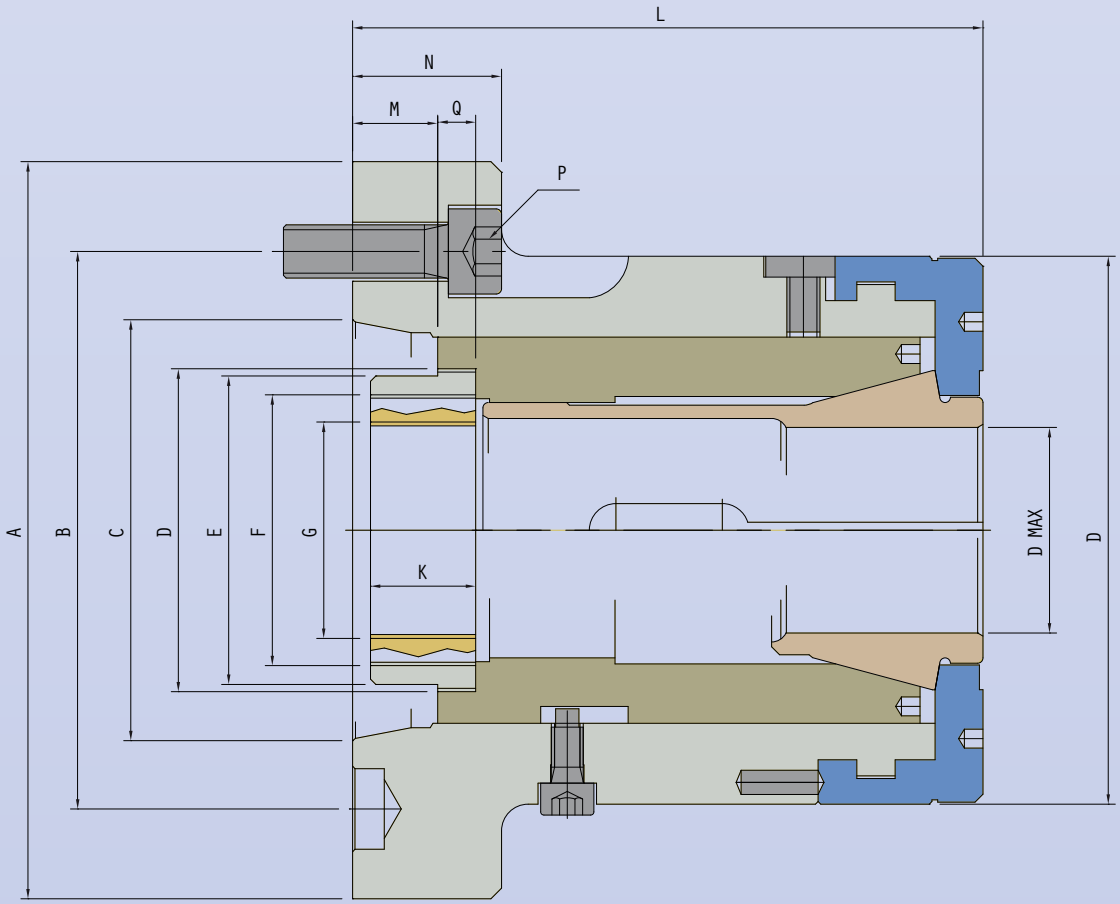

"A" - "K" Series

HARDENED REVERSIBLE JAWS, STEP TYPE

	Size	A	B	C	D	E	F	G	H	I H8	L	M	Pitch	Weight
	mm	mm	mm	mm	mm	mm	mm	mm	mm	mm	mm	mm	mm	kg
154	230 250 270	52	35	91	30	-	11	18	10	12	4.5	25	2.5x60°	0.7
239	300	59	50	110	40	-	13	19	11	18	5	25	2.5x60°	1.3
488	400	70	60	150	50	-	17	25	12	20	5.5	37.5	2.5x60°	2.6
1270	170	40	28	74	28	36	9	14	8	10	4	-	2.5x60°	0.3
1334	200	42	30	80	32	36	9	14	8	10	4	-	2.5x60°	0.4
1365	140	30	25	64	18	30	9	14	8	10	4	-	2.5x60°	0.2
1654	120	24	24	51	21	18	6.5	10.5	8	8	4	-	2.5x60°	-
1614	500	80	70	180	75	80	23	33	15	30	6	40	2.5x60°	3.8
1424	315	58	44	135	36	-	16	24	14	21	5	36	1/16"x90°	1.5
1425	200	44	38	87	30	-	11	18	12	12	4.5	21	1/16"x90°	0.5
1430	150	28	25	60	18	-	9	14	8	10	4	16	1/16"x90°	0.15
1436	250	46	44	100	21	-	16	24	14	21	5	30	1/16"x90°	0.8
1521	400	70	60	150	50	-	17	25	12	20	5.5	37.5	3/32"x90°	2.6

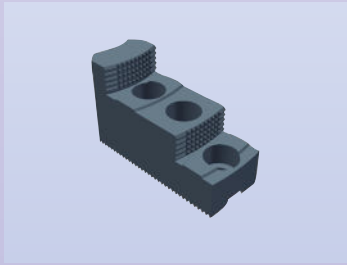

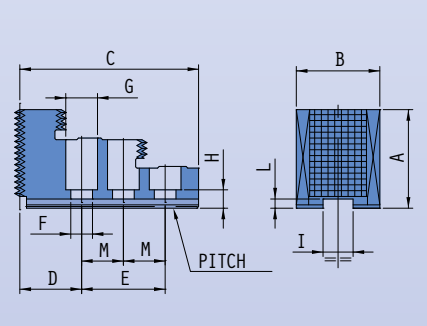

SOFT JAWS

	Size	A	B	C	D	E	F	G	H	I H8	L	Pitch	Weight
	mm	mm	mm	mm	mm	mm	mm	mm	mm	mm	mm	mm	kg
155	230	40	40	100	16	50	11	18	10	12	4.5	2.5x60°	1..4
240	300 330	60	60	120	20	50	13	19	11	18	5	2.5x60°	3.6
489	400	60	60	150	25	75	17	25	12	20	5.5	2.5x60°	4.0
525	250 270	40	40	125	16	50	11	18	10	12	4.5	2.5x60°	1.4
636	120	25	25	55	11	22	6.5	10.5	8	8	4	2.5x60°	0.2
1271	170	30	30	80	16	36	9	14	8	10	4	2.5x60°	0.5
1314	90	20	20	45	7	25	6.5	10.5	6	7	3	2.5x60°	0.1
1335	200	35	35	90	16	36	9	14	8	10	4	2.5x60°	0.7
1364	140	25	25	65	12	30	9	14	8	10	4	2.5x60°	0.25
1613	500	70	70	180	25	80	23	33	15	30	6	2.5x60°	4.6
1294	315	50	50	140	32	36	16	24	14	21	4.5	1/16"x90°	2.4
1390	150	30	25	65	12	16	9	14	8	10	4	1/16"x90°	0.2
1407	200	40	40	90	12	38	11	18	10	12	4.5	1/16"x90°	1
1435	250	50	50	115	32	38	16	24	14	21	5	1/16"x90°	2
1520	400	60	60	145	25	75	17	25	12	20	5.5	3/32"x90°	3.8

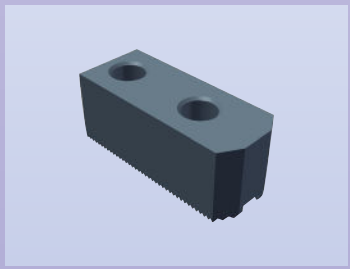

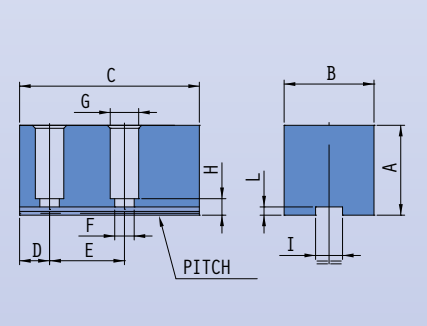

T-NUT

	A	B	C	D f8	E	F	G	H
	mm	mm	mm	mm	mm	mm	mm	mm
t59	19.5	17.5	26	12	11	9	M10	-
241	26.5	24.5	32	18	17	12	M12	-
490	33.5	30.5	35	20	20	15	M16	-
635	14	12	12	8	8.5	6	M6	-
1292	29.5	ø28	-	21	19	-	M14	-
1298	15.5	14.5	19	10	8.5	7	M8	-
1429	29.5	28	30	21	19	15	M14	-
1447	16	14.5	32	10	9	8	M8	16
1612	35	39	45	30	18	18	M20	-

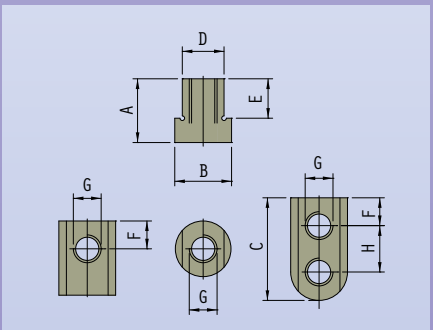

"GB" - "KZ" - "GH" - "GX" Series

HARDENED REVERSIBLE JAWS, STEP TYPE

	Size	Type	Pitch	A	B	C	D	E	F	G	H	I	L H8	M	N	O
	mm		mm	mm	mm	mm	mm	mm	mm	mm	mm	mm	mm	mm	mm	mm
2211A	130	GB	1/16"x90°	34	29	58	8.5	14	16	9	14	8	12	4	5	2
2212A	130	GB	1.5x60°	34	29	58	8.5	14	16	9	14	8	12	4	5	2
2031A	165 180 208	GB GH GX	1/16"x90°	39	34	65	10	18	16	11	17	10	14	4	5.5	4
2032A	165	GB	1.5x60°	39	34	65	10	18	16	11	17	10	14	4	5.5	4
2033K	165	GB	1.5x60°	36	31	67	12	14	20	11	17	12	12	5	5	4
2044A	210	GB KZ	1/16"x90°	45	40	82	10.5	19	23	13	19	11	17	5	6.5	5
2045A	210	GB GZ	1.5x60°	45	40	82	10.5	19	23	13	19	11	17	5	6.5	5
2046K	210	GB GZ	1.5x60°	51	35	87	12	14	25	13	19	14	14	5	5	4
2057A	250 260	GB GZ GH GX GB GH GX	1/16"x90°	56	45	105	13.5	28	30	17	25	12	21	6	8	5
2058A	250 315	GB KZ GB	1.5x60°	56	45	105	13.5	28	30	17	25	12	21	6	8	5
2059K	250	GB KZ	1.5x60°	54	40	105	13	24	30	13	19	15	16	5	5	4.5

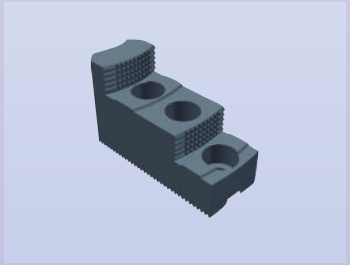

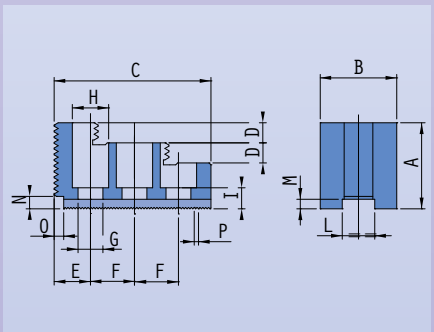

SOFT JAWS

	Size	Type	Pitch	A	B	C	D	E	F	G	H	I H8	L
	mm		mm	mm	mm	mm	mm	mm	mm	mm	mm	mm	mm
F7302014A	130	GB	1/6"x90°	30	30	60	15	16	14	9	10	12	4
F7402015A	130	GB	1.5x60°	30	30	60	15	16	14	9	10	12	4
F7402016K	130	GB											
F7302034A	165 180 208	GB GH GZ	1/6"x90°	35	35	75	16	16	17	11	11	14	5
F7402035A	165	GB	1.5x60°	35	35	75	16	16	17	11	11	14	4
F7402036K	165	GB	1.5x60°	30	30	80	19	20	17	11	12	12	5
F7302047A	210	GB KZ	1/6"x90°	40	40	95	20	23	19	13	11	17	5
F7402048A	210	GB KZ	1.5x60°	40	40	95	20	23	19	13	11	17	5
F7402049K	210	GB KZ	1.5x60°	40	40	95	20	25	19	13	11	14	5
F7302060A	250 260 315	GB KZ GH GX GB GH GX	1/6"x90°	50	50	115	20	30	25	17	13	21	6
F7402061A	250 315	GB KZ GB	1.5x60°	50	50	115	20	30	25	17	13	21	6
F7302062K	250	GB KZ	1.5x60°	40	40	115	30	30	19	13	13	16	5

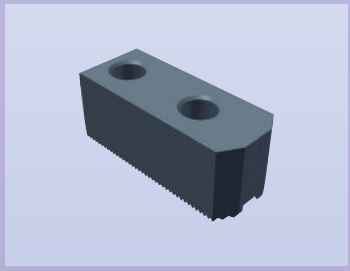

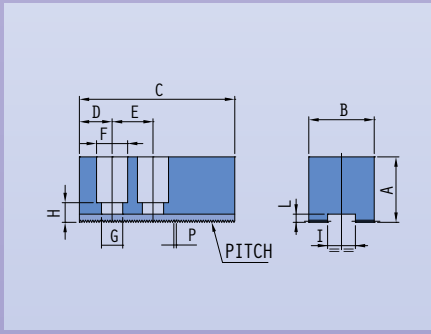

T-NUT

	A	B	C	D f8	E	F	G	H	I	L
	mm	mm	mm	mm	mm	mm	mm	mm	mm	mm
F7502210	15	17	M8	12	-	8.5	-	30	7	16
F7502209	15	14	M8	10	-	9.8	-	30	6	18
F7502027	18.5	18	M10	14	10.9	12	8	32	8	16
F7502026	18.5	18	M10	12	-	11	-	40	10	20
F7502038	20	19	M12	17	13.5	12.5	7.5	45	12	23
F7502037	20	20	M12	14	-	12	-	45	10	25
F7502051	25	29	M16	21	-	14	-	54	12	30
F7502050	25	29	M12	16	21	14	9	54	12	30
F7502051	25	29	M16	21	-	14	-	54	12	30

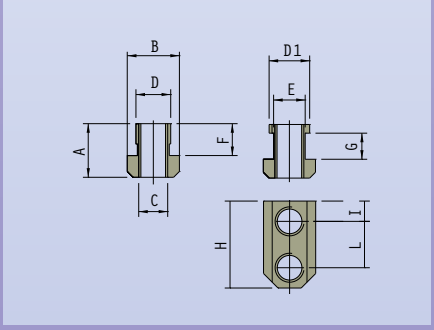

Diaphragm jaws

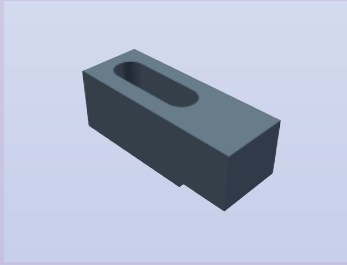

DIAPHRAGM JAWS WITH
SLIDERS MALE SLOT

	A h6	D	E	F	G	H	I	L	M	N	O	Weight
	mm	mm	mm	mm	mm	mm	mm	mm	mm	mm	mm	kg
01582	30	30	9	14	10	82	14	31	14	59	3	0.43
01583	20	25	7	11	10	70	12	26	12	50	5	0.21

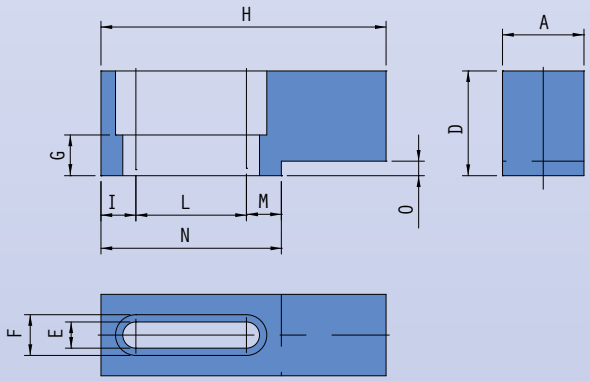

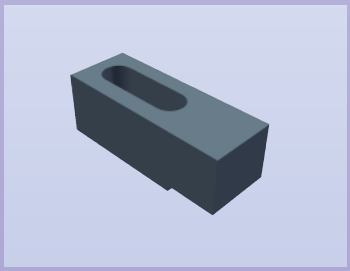

DIAPHRAGM JAWS WITH
SLIDERS FEMALE SLOT

												mm	mm	kg
01584	15	4	28	36	9	14	14	98	12	38	18	68	5	0.52
01585	20	4	38	38	11	17	14	110	15	44	20	79	5	0.83
01923	15	4	25	28	7	11	13	70	10	32	16	58	5	0.26

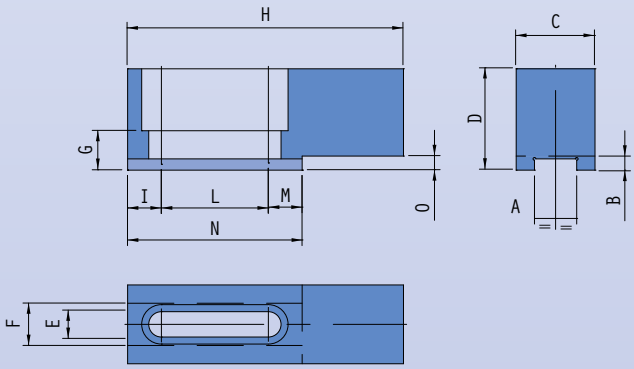

ASA flanges for self-centering chucks GB - KZ series

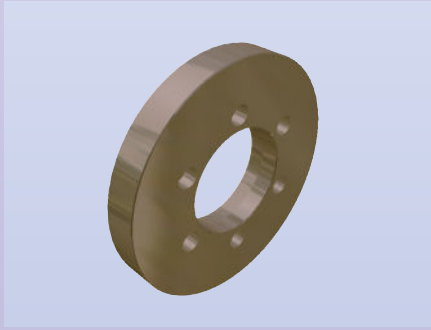

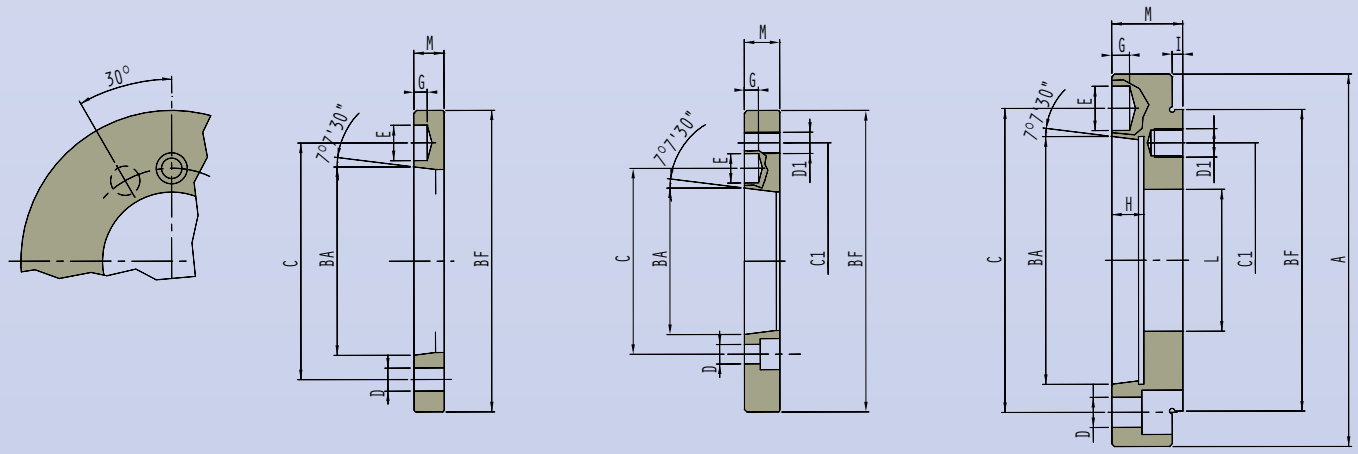

	Chuck	Series	ASA	Type	A	BF	BA	C	D	C1	D1	E	G	H	I	M
	mm				mm	mm	mm	mm	mm	mm	mm	mm	mm	mm	mm	mm
F7702204D	130	GB	A4″	1	-	115	63.51	82.6	3x 11.5	-	-	15	8	-	-	13
F7702205MG	130	GB	A5″	3	127	115	82.56	104.8	3x 11.5	82.6	3x M10	16.5	8	15	5	30
F7702206MG	130	GB	A6″	3	163	115	106.37	133.4	3x 13	82.6	3x M10	20	8	16	6	35
F7702028D	165	GB	A5″	1	-	140	82.56	104.8	6x 11.5	-	-	16.5	8	-	-	17
F7702029MN	165	GB	A4″	2	-	140	63.51	82.6	6x 11.5	104.8	6x M10	15	8	-	-	18
F7702030MG	165	GB	A6″	3	165	140	106.37	133.4	3x 13	104.8	6x M10	20	8	16	6	35
F7702039D	210	GB KZ	A6″	1	-	170	106.37	133.4	6x 13	-	-	20	8	-	-	17
F7702040MN	210	GB KZ	A5″	2	-	170	82.56	104.8	6x 11.5	133.4	6x M12	16.5	8	-	-	20
FF7702041MG	210	GB KZ	A8″	3	210	170	139.71	171.4	6x 17	133.4	6x M12	25	10	18	6	40
F7702052D	250	GB KZ	A8″	1	-	220	139.71	171.4	6x 17	-	-	25	10	-	-	25
F7702053MN	250	GB KZ	A6″	2	-	220	106.37	133.4	6x 13	171.4	6x M16	20	8	-	-	22
F7702054MG	250	GB KZ	A11″	3	280	220	196.86	235	3x 21	171.4	6x M16	30	12	20	6	45
F7702063D	315	GB	A11″	1	-	300	196.86	235	6x 21	-	-	30	12	-	-	25
F7702064MN	315	GB	A8″	2	-	300	139.71	171.4	6x 17	235	6x M20	25	10	-	-	28

- Pneumatic safety devices for every kind of pneumatic cylinder without bar passage, assembled on distributing group

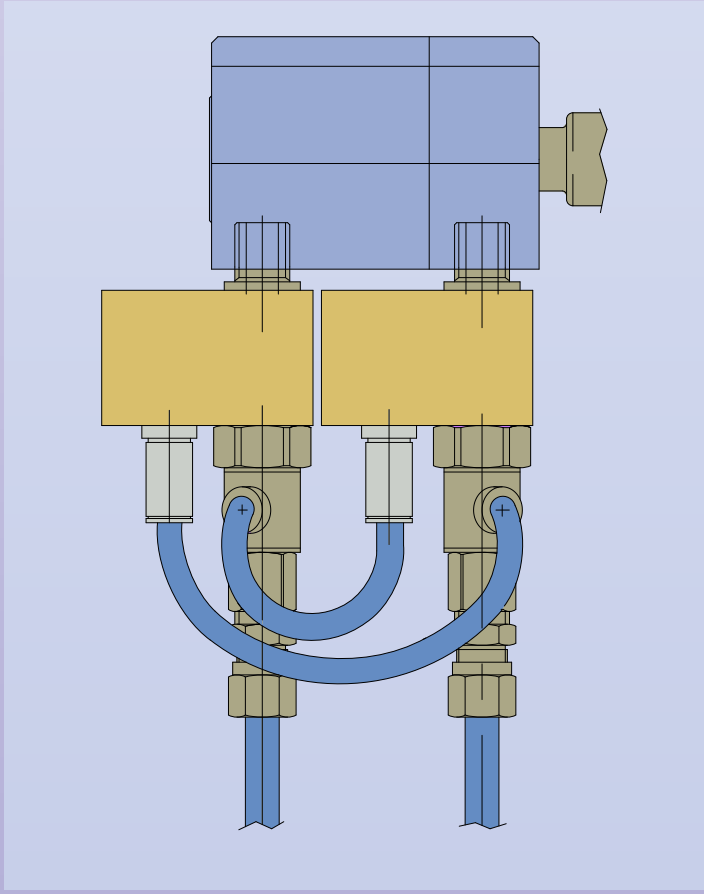

- Rotating distributing groups for every kind of pneumatic cylinder without bar passage, with stroke control option

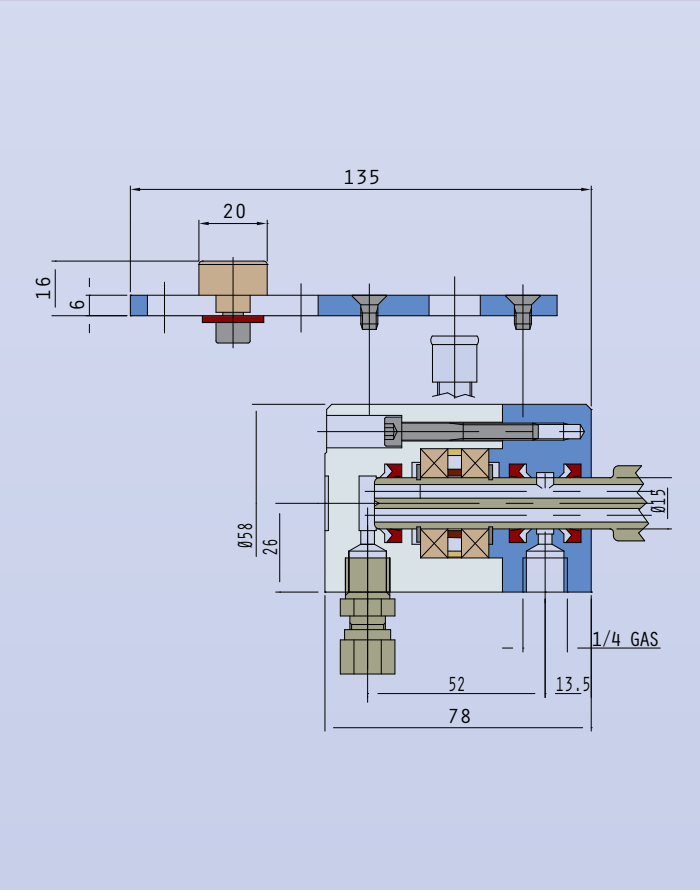

- Safety valves for faceplates

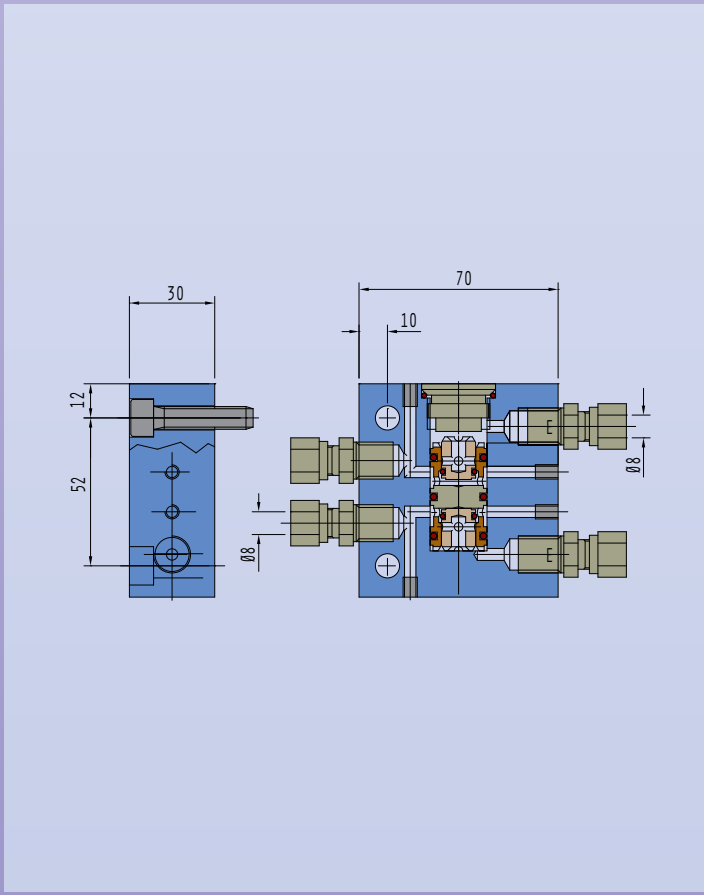

- Safety valve set in distributing groups for pneumatic cylinder BX series

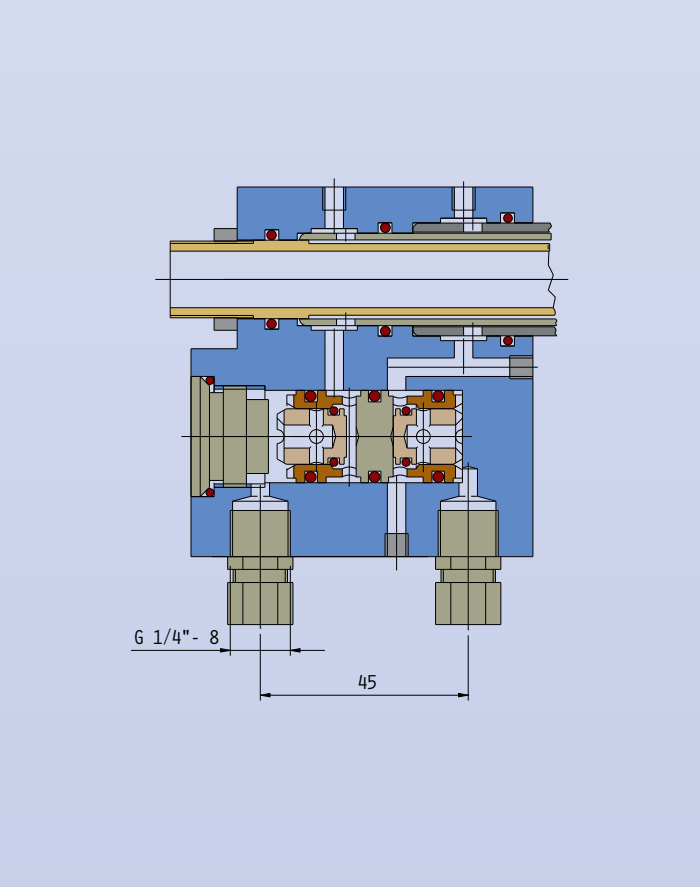

DIAGRAM FOR PNEUMATIC ASSEMBLY

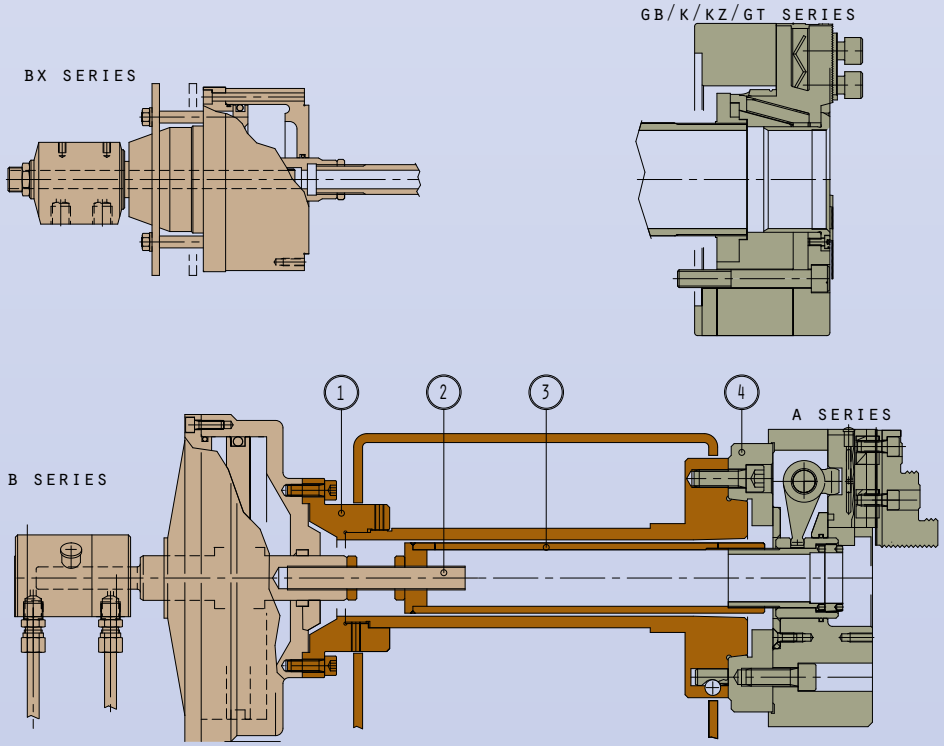

1 Cylinder flange
2 Connection screw
3 Tie rod
4 Self-centering flange

DIAGRAM FOR HYDRAULIC ASSEMBLY

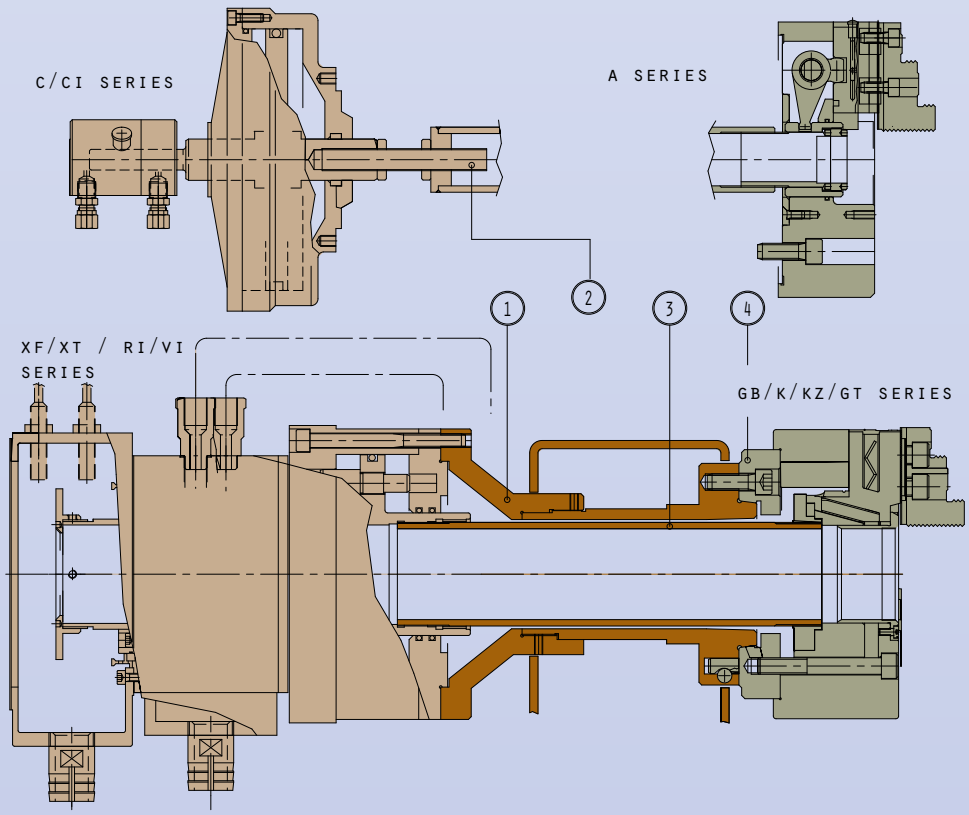

1 Cylinder flange
2 Connection screw
3 Tie rod
4 Self-centering flange

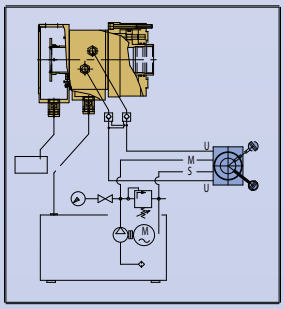

Max load capacities are only indicative, They must therefore be always related to the real conditions of work.
EUROMA will not be responsible for any damage caused by inadequate use of the data.

First issue - July 2016